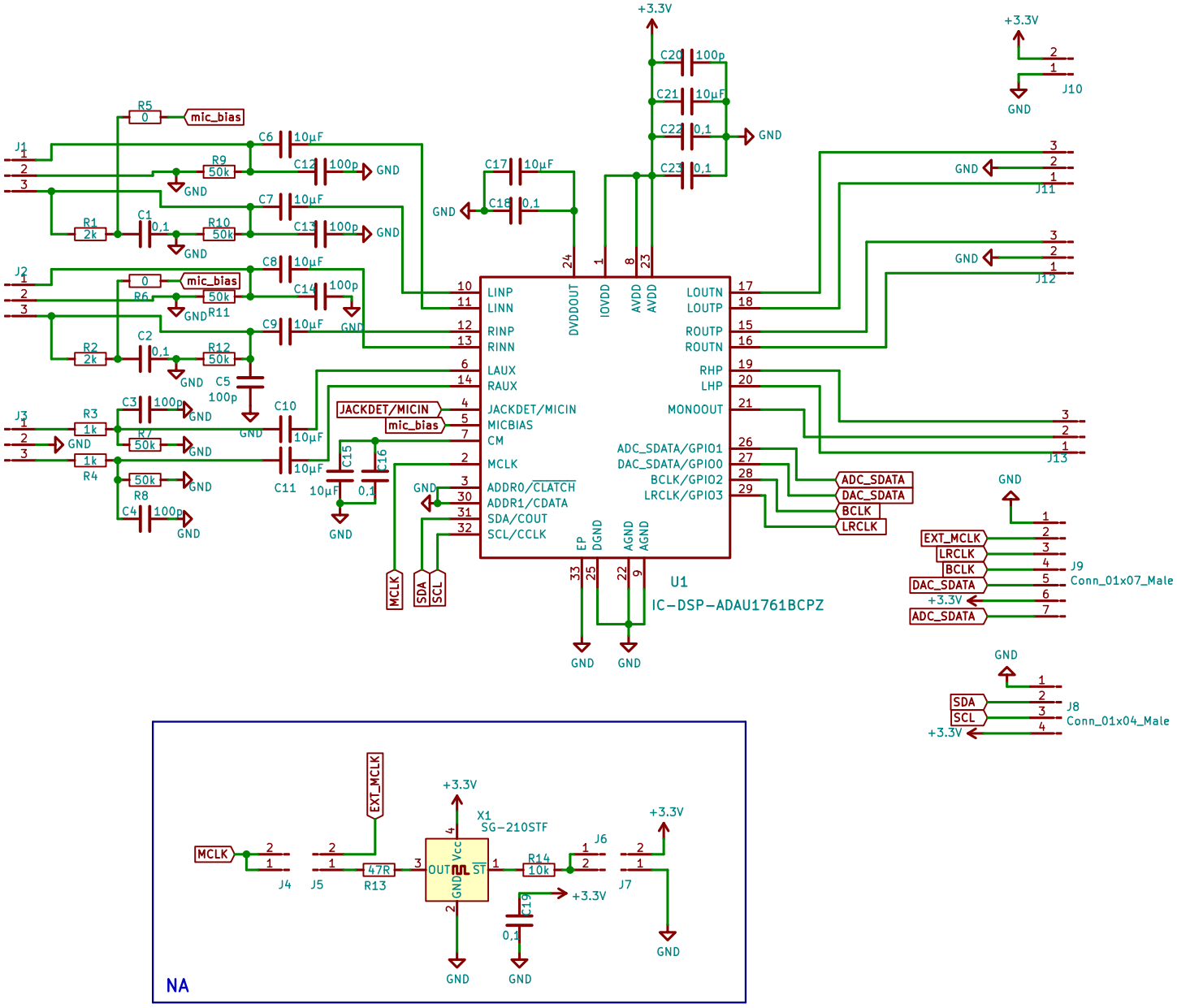
U1
IC-DSP-ADAU1761BCPZ
LINP
LINN
RINP
RINN
LAUX
RAUX
JACKDET/MICIN
MICBIAS
CM
MCLK
ADDR0/CLATCH
ADDR1/CDATA
SDA/COUT
SCL/CCLK
DVDDOUT
IOVDD
AVDD
LOUTN
LOUTP
ROUTP
ROUTN
RHP
LHP
MONOOUT
ADC_SDATA/GPIO1
DAC_SDATA/GPIO0
BCLK/GPIO2
LRCLK/GPIO3
EP
DGND
AGND
+3.3V
GND
mic_bias
ADC_SDATA
DAC_SDATA
BCLK
LRCLK
EXT_MCLK
SDA
SCL
J9
Conn_01x07_Male
J8
Conn_01x04_Male
J10
J11
J12
J13
X1
SG-210STF
OUT
Vcc
ST
NA