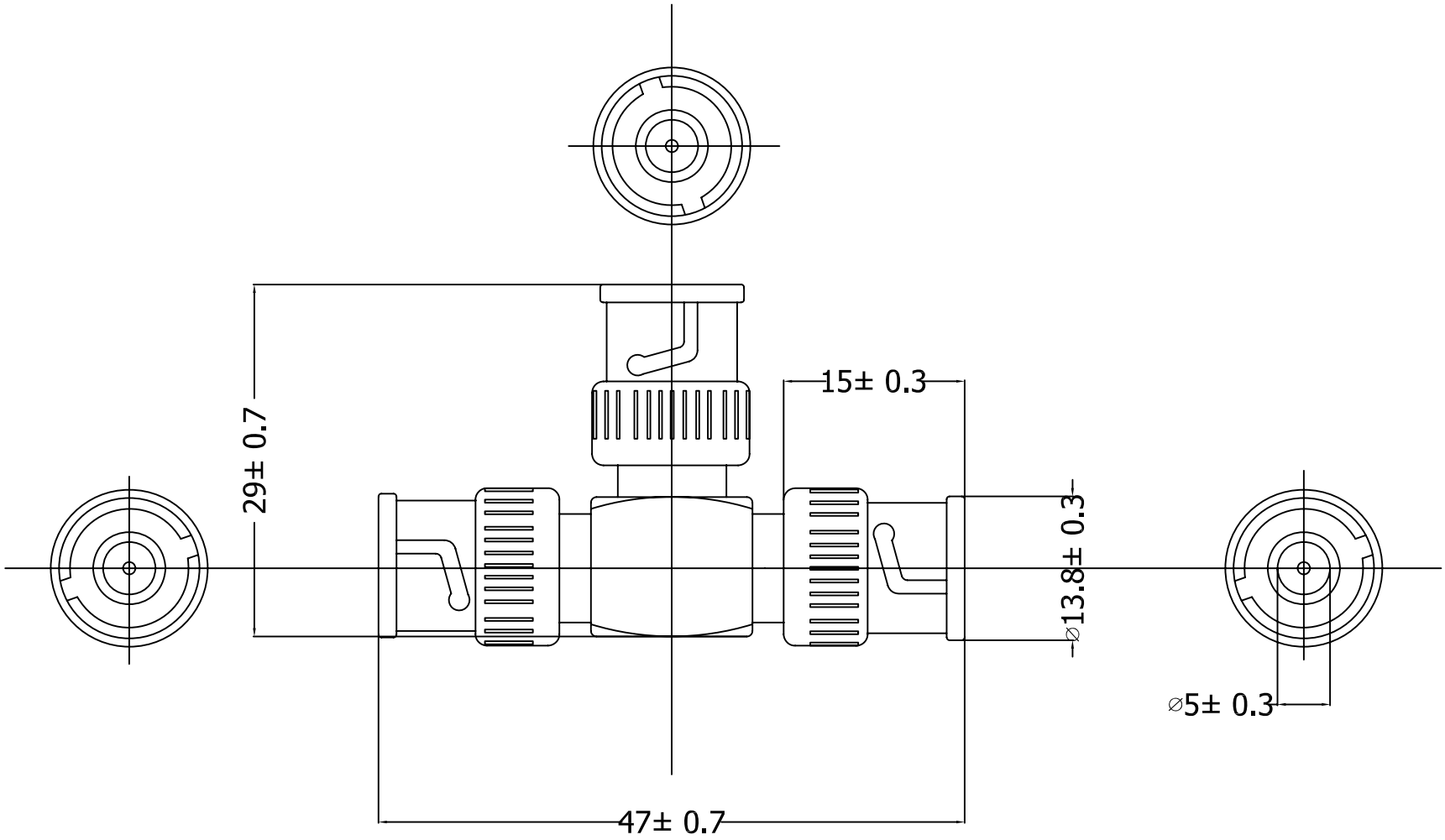

			P/NO.:	NCB-0166			NEW CENTRESS INTERNATIONAL CO., LTD.
			CUSTOMER:	CHIP & DIP			
			CUST. P/N.:	GB-166			
			APP.	Eric	UNITS	m/m	
1.0	NEW DRAWING	2008/12/24	CHK.	Carmen	DATE	2008/12/24	DES.: BNC 3＊MALE T TYPE
VER.NO.	DESCRIPTION	DATE	DRAW.	Christina	SHEET	1/1	DRAW NO.: NCB-0166 VER 1.0