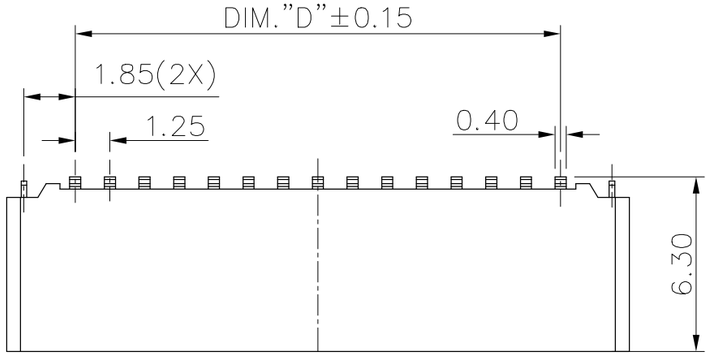

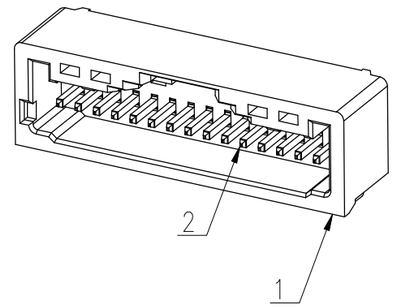

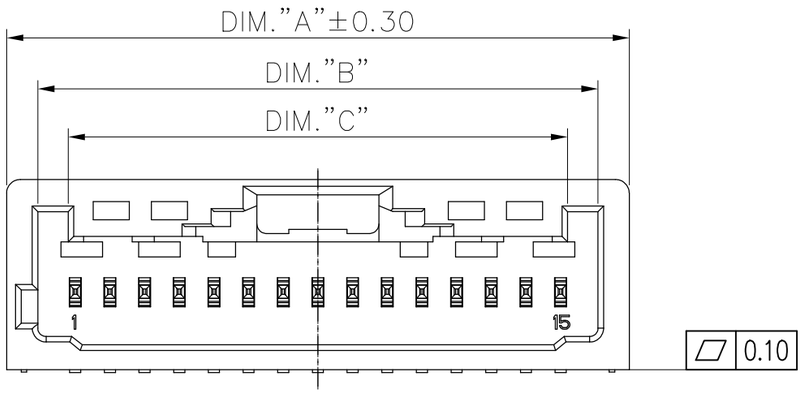

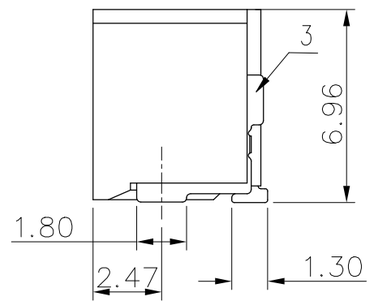

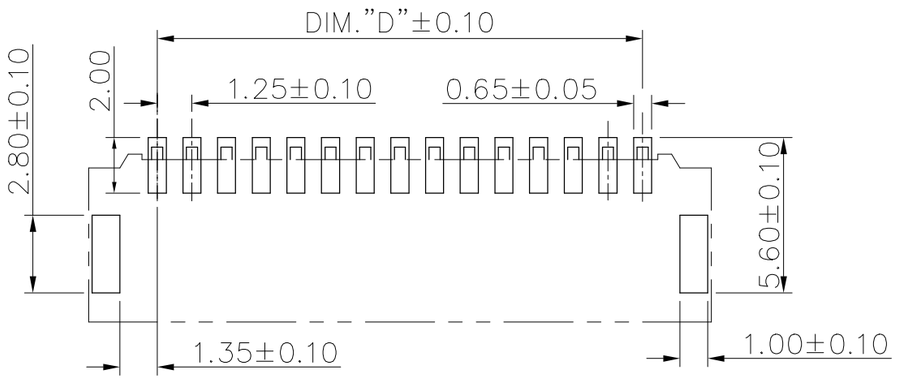

RECOMMENDED PCB LAYOUT
GENERAL TOLERANCE +/−0.05

NOTE:
1. ELECTRICAL CHARACHERISTICS:
   1.1 CURRENT RATING : 1A Max./PER PIN.
   1.2 CONTACT RESISTANCE: 30mΩ MAX (INITIAL).
   1.3 INSULATOR RESISTANCE: 100MΩ MIN.
   1.4 DIELECTRIC WITHSTANDING VOLTAGE: 500V AC;
   1.5 OPERATION TEMPERATURE: −40 ℃ ~ +105 ℃;
2. MECHANICAL CHARACHERISTICS:
   2.1 DURABILITY : 30 CYCLES.
   2.2 HEADER PIN RETENTION FORCE: 2.94N MIN.
3. RECEMMENDED PCB THICKNESS IS 1.60mm.
4. THE HOUSING WILL WITHSTAND EXPOSURE TO 260℃ PEAK TEMPERATURE FOR 20 SECONDS IN A CONVECTION, INFRA−RED OR VAPOR PHASE REFLOW.
5. LEAD FREE PRODUCT MEETS EUROPEAN UNION DIRECTIVES AND OTHER COUNTRY REGULATIONS AS DISCRIBLED IN GS−22−008.
6. PRODUCT SPECITICATION: GS−12−1610;
7. PACKAGE SPECITICATION: GS−14−2615;
8. PART NUMBER:
   10157547−X X XX XX X LF
   - PLATING: 0=PLATING Tin
   - COLOR: 0=NATURAL, 1=BLACK
   - PIN NO.: XX=02~15 PIN
   - TYPE: SR=SINGLE/ROW
   - PITCH: 1=1.25mm

PIN NO	DIM."A"	DIM."B"	DIM."C"	DIM."D"
15	22.45	20.20	18.00	17.50
14	21.20	18.95	16.75	16.25
13	19.95	17.70	15.50	15.00
12	18.70	16.45	14.25	13.75
11	17.45	15.20	13.00	12.50
10	16.20	13.95	11.75	11.25

PIN NO	DIM."A"	DIM."B"	DIM."C"	DIM."D"
09	14.95	12.70	10.50	10.00
08	13.70	11.45	9.25	8.75
07	12.45	10.20	8.39	7.50
06	11.20	8.95	6.75	6.25
05	9.95	7.70	5.50	5.00
04	8.70	6.45	4.25	3.75
03	7.45	5.20	3.00	2.50
02	6.20	3.95	N/A	1.25

No.	Component	Material	Q'ty	Remark
3	Hold-down	Copper Alloy,Matte Tin Over Ni Plate	2	
2	Terminal	Copper Alloy,Matte Tin Over Ni Plate	N	
1	Housing	Hilght Temperature Thermoplastic Natural ,UL94V−0	1	

ltr	ecn no	dr	date
A	-	A.Z	2020/07/23
B	ELX-N-43682	JF	2022/1/26

mat'l. code
surface ISO 1302
tolerance ISO 406 ISO 1101
projection specified
tolerances unless otherwise: angles 0°±2°; linear .0±.30, .00±.20, .000±.10
mm
scale N/A

dr	Arthur Zhao	2020/07/23
engr	Arthur Zhao	2020/07/23
chr	Nick Zhang	2020/07/23
appd	Tim Yao	2020/07/23

Amphenol FCi

product family: HPL 542
title: HEADER ASSEMBLY
Multipitch WTB
dwg no: 10157547
sheet 1 of 1
size: A3
type: Product Customer Drawing
sheet index: revision B; sheet 1

© 2016 AFCI