Short-stroke cylinders ADVC/AEVC

FESTO

- Compact short-stroke cylinders with standard port pattern from ∅ 32 mm
- Optimised fitting space and height
- Adaptable housing and piston rod variants for individual applications

Short-stroke cylinders ADVC/AEVC

Key features

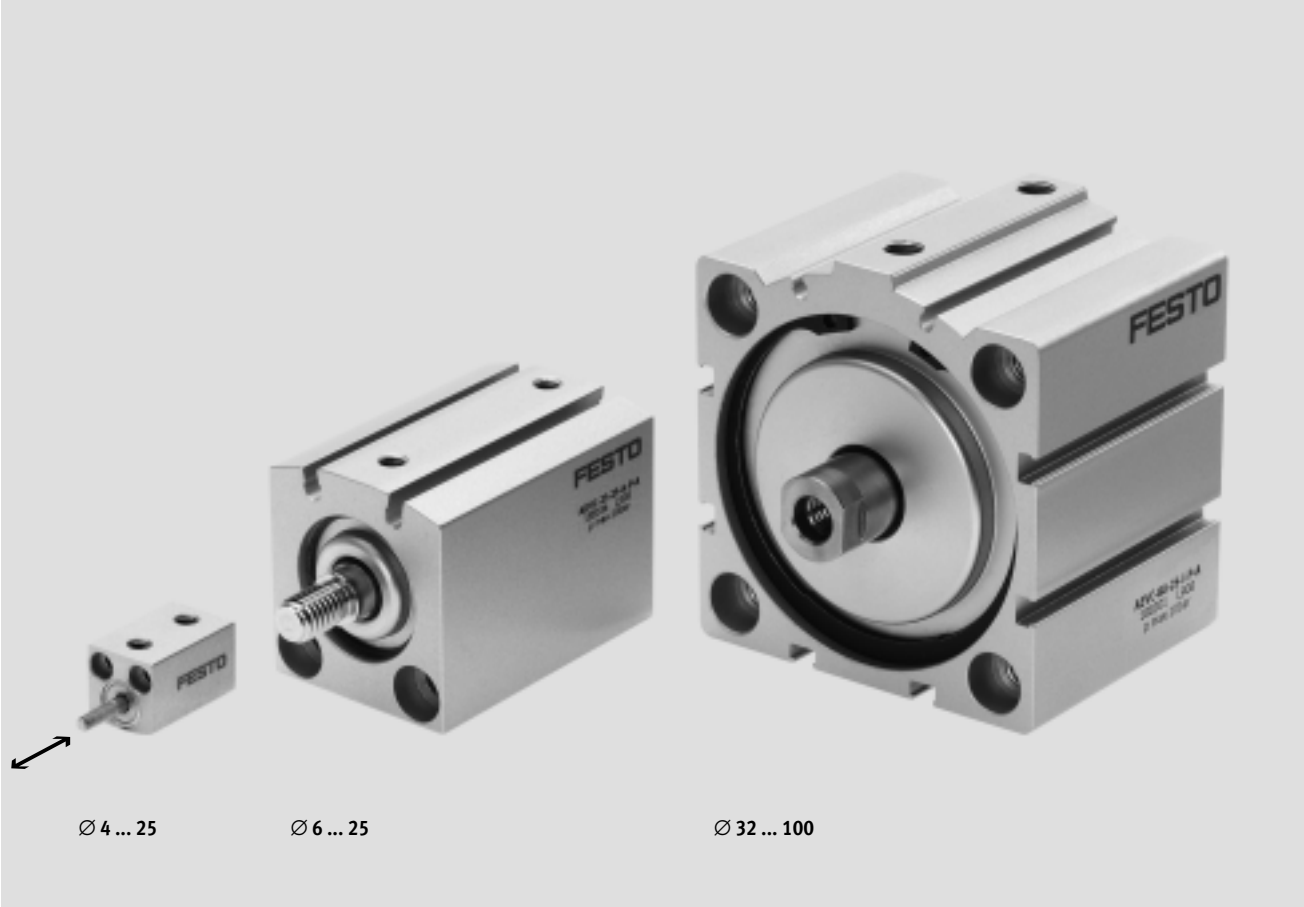

Brief description

- ∅ - Diameter 4 ... 100 mm
- ❙ - Stroke length 2.5 ... 25 mm

Short-stroke cylinders are ideal for clamping tasks with short strokes, e.g. in retaining devices.

The cylinders offer:

- Rapid response with applied pressure
- Large clamping forces in comparison to their size
- Minimal installation space
- Integrated sensor slots for contacting or contactless proximity sensors
- Mounting hole pattern to VDMA 24562 for ∅ 32 ... 100 mm

Fitting space comparison with 10 mm stroke

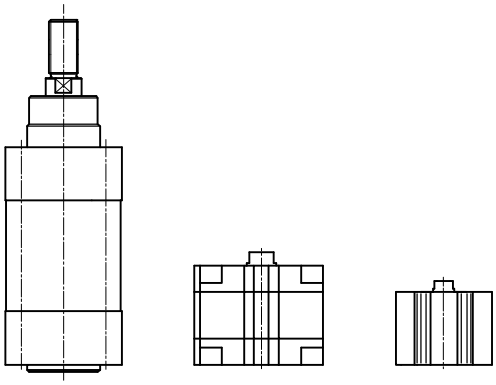

100%
Standard cylinder
DNC

45%
Compact cylinder
ADVU

33%
Short-stroke cylinder
ADVC

Sensor slots

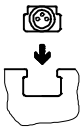

T-slot for proximity sensor SME/SMT-8

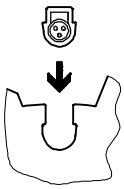

C-slot for proximity sensor SME/SMT-10

Short-stroke cylinders ADVC/AEVC

Type codes

ADVC	–	6	–	5	–	A	–	P	–	A

Type	
ADVC	Double acting short stroke cylinder
AEVC	Single-acting short stroke cylinder

Piston ∅ [mm]

Stroke [mm]

Piston rod thread	
A	Male thread
I	Female thread
	Without thread

Cushioning	
P	Flexible cushioning rings/plates at both ends

Position sensing	
	No position sensing
A	For proximity sensing

Short-stroke cylinders ADVC/AEVC

Product range overview

Function	Version	Type	Piston ∅ [mm]	Stroke [mm]	Position sensing
Double-acting	**Without position sensing**				
		**ADVC** ∅ 4 ... 25	4	2.5; 5	–
			6, 10, 12	5, 10	
			16, 20, 25	5, 10, 15, 20, 25	
		**ADVC** ∅ 32 ... 100	32, 40	5, 10, 15, 20, 25	–
			50, 63, 80, 100	10, 15, 20, 25	
	With position sensing				
		**ADVC-...-A** ∅ 6 ... 25	6, 10, 12	5, 10	■
			16, 20, 25	5, 10, 15, 20, 25	
		**ADVC-...-A** ∅ 32 ... 100	32, 40	5, 10, 15, 20, 25	■
			50, 63, 80, 100	10, 15, 20, 25	
Single-acting	**Without position sensing**				
		**AEVC** ∅ 4 ... 25	4	2.5; 5	–
			6, 10, 12	5, 10	
			16, 20, 25	5, 10, 25	
		**AEVC** ∅ 32 ... 100	32	5, 10, 25	–
			40, 50, 63, 80, 100	10, 25	
	With position sensing				
		**AEVC-...-A** ∅ 6 ... 25	6, 10, 12	5, 10	■
			16, 20, 25	5, 10, 25	
		**AEVC-...-A** ∅ 32 ... 100	32	5, 10, 25	■
			40, 50, 63, 80, 100	10, 25	

Short-stroke cylinders ADVC/AEVC

Product range overview

Type	Piston rod			Cushioning	➔ Page/Internet
	With male thread	With female thread	Without thread		
Without position sensing					
ADVC ∅ 4 ... 25	■	■ From ∅ 12	■ ∅ 4 ... 12	■	8
ADVC ∅ 32 ... 100	■	■	–	■	8
With position sensing					
ADVC-...-A ∅ 6 ... 25	■	■ From ∅ 12	■ ∅ 6 ... 12	■	16
ADVC-...-A ∅ 32 ... 100	■	■	–	■	16
Without position sensing					
AEVC ∅ 4 ... 25	■	■ From ∅ 12	■ ∅ 4 ... 12	■	24
AEVC ∅ 32 ... 100	■	■	–	■	24
With position sensing					
AEVC-...-A ∅ 6 ... 25	■	■ From ∅ 12	■ ∅ 6 ... 12	■	30
AEVC-...-A ∅ 32 ... 100	■	■	–	■	30

Short-stroke cylinders ADVC/AEVC

Peripherals overview

∅ 32 ... 100 mm

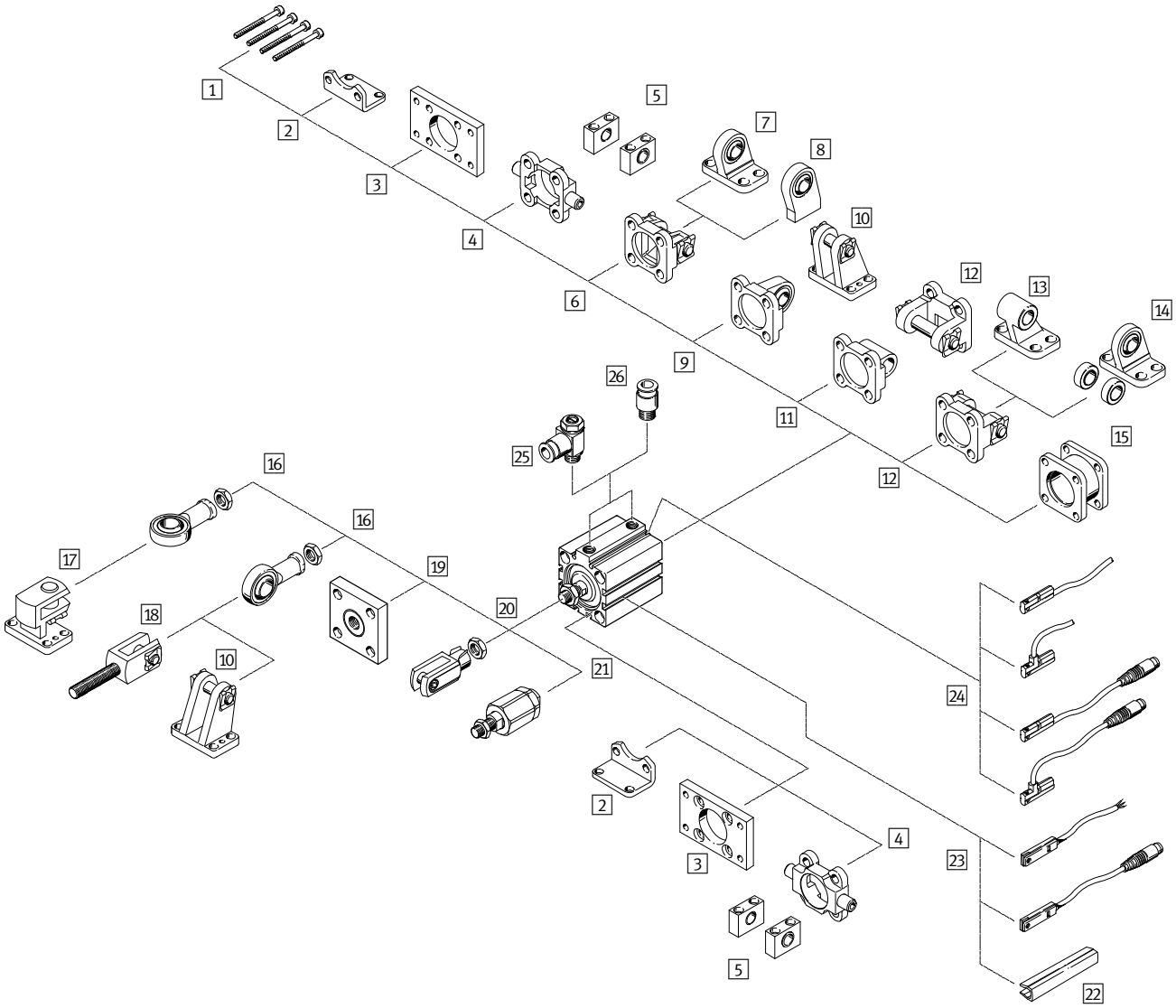

∅ 4 ... 25 mm Without position sensing	∅ 6 ... 25 mm With position sensing
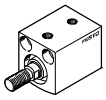	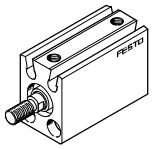

Mounting attachments and accessories						
		Description	Piston ∅			➔ Page/Internet
			4, 6, 12	10, 16 … 25	32 … 100	
1	Mounting screws	Not included in scope of delivery	■ DIN 84	■ DIN 912	■ DIN 912	–
1	Mounting screws for ∅ 80, 100	Not included in scope of delivery	–	–	■	45
2	Foot mounting HNC	For bearing and end caps	–	–	■	37
3	Flange mounting FNC	For bearing or end caps	–	–	■	38
4	Trunnion flange ZNCF	For bearing or end caps	–	–	■	39
5	Trunnion support LNZG	–	–	–	■	40
6	Swivel flange SNC	For end caps	–	–	■	41
7	Clevis foot LSNG	With spherical bearing	–	–	■	45
8	Clevis foot LSNSG	Weld-on, with spherical bearing	–	–	■	45
9	Swivel flange SNCS	With spherical bearing for end caps	–	–	■	43
10	Clevis foot LBG	–	–	–	■	45
11	Swivel flange SNCL	For end caps	–	–	■	44
12	Swivel flange SNCB	For end caps	–	–	■	42
13	Clevis foot LNG	–	–	–	■	45
14	Clevis foot LSN	With spherical bearing	–	–	■	45
15	Adapter kit DPNC	For connecting two cylinders with identical piston diameter to form a multi-position cylinder	–	–	■	36
16	Rod eye SGS	With spherical bearing	–	■	■	46
17	Right-angle clevis foot LQG	–	–	■	■	45
18	Rod clevis SGA	With male thread	–	–	■	46
19	Coupling piece KSG	For compensating radial deviations	–	–	■	46
20	Rod clevis SG	Permits a swivelling movement of the cylinder in one plane	–	■	■	46
21	Self-aligning rod coupler FK	For compensating radial and angular deviations	■ ∅ 12	■	■	46
22	Slot cover ABP-5-S	To protect the sensor cable and keep dirt out of the sensor slots	–	–	■	47
23	Proximity sensors SME/SMT-8	Can be integrated in the cylinder profile barrel	–	–	■	47
24	Proximity sensors SME/SMT-10	Can be integrated in the cylinder profile barrel	–	■	■	48
25	One-way flow control valve GRLA	To regulate speed	■	■	■	48
26	Push-in fitting QS	For connecting compressed air tubing with standard external diameters	■	■	■	quick star

Short-stroke cylinders ADVC

Technical data, double-acting – without position sensing

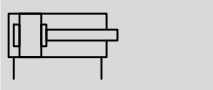

- Ø - Diameter
  4 ... 100 mm

- l - Stroke length
  2.5 ... 25 mm

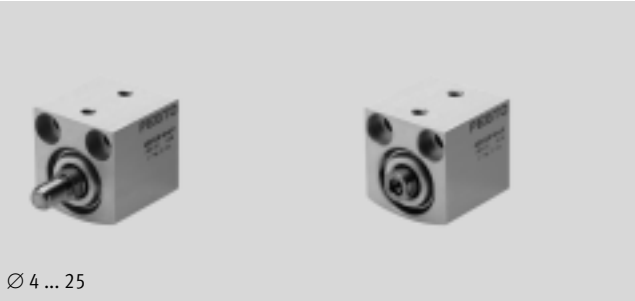

∅ 4 ... 25

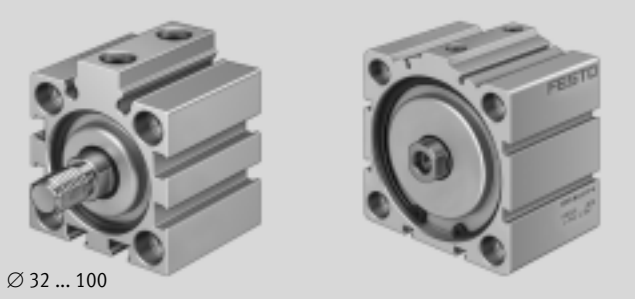

∅ 32 ... 100

General technical data													
Piston ∅	4	6	10	12	16	20	25	32	40	50	63	80	100
Pneumatic connection	M3	M3	M5	M5	M5	M5	M5	G⅛	G⅛	G⅛	G⅛	G⅛	G¼
Piston rod with female thread	–	–	–	■	■	■	■	■	■	■	■	■	■
Piston rod with male thread	■	■	■	■	■	■	■	■	■	■	■	■	■
Piston rod without thread	■	■	■	■	–	–	–	–	–	–	–	–	–
Operating medium	Compressed air in accordance with ISO 8573-1:2010 [7:4:4]												
Note on operating/pilot medium	Operation with lubricated medium possible (in which case lubricated operation will always be required)												
Constructional design	Piston												
	Piston rod												
Cushioning	Flexible cushioning rings/plates at both ends												
Type of mounting	Via through-holes							Via through-holes					
	–							Via accessories					
Mounting position	Any												

Operating conditions														
Piston ∅		4	6	10	12	16	20	25	32	40	50	63	80	100
Operating pressure	[bar]	2 ... 8	1.5 ... 8	1 ... 8	1 ... 10				0.6 ... 10					
Ambient temperature	[°C]	–20 ... +80												
Corrosion resistance class CRC[1)]		1												

1) Corrosion resistance class CRC 1 to Festo standard FN 940070
Low corrosion stress. For dry indoor applications or transport and storage protection. Also applies to parts behind covers, in the non-visible interior area, and parts which are covered in the application (e.g. drive trunnions).

Short-stroke cylinders ADVC

Technical data, double-acting – without position sensing

Forces [N] and impact energy [J]													
Piston ∅	4	6	10	12	16	20	25	32	40	50	63	80	100
Theoretical force at 6 bar, advancing	7.5	17	47	68	121	189	295	483	754	1178	1870	3016	4712
Theoretical force at 6 bar, returning	5.7	13	40	51	91	141	247	415	686	1056	1750	2847	4418
Max. impact energy at end positions	0.003	0.005	0.03	0.06	0.10	0.14	0.18	0.26	0.36	0.60	0.64	0.90	1.20

Product weight [g]													
Stroke [mm]	Piston ∅												
	4	6	10	12	16	20	25	32	40	50	63	80	100
2.5	4	–	–	–	–	–	–	–	–	–	–	–	–
5	4.5	12.5	23	34	68	112	135	280	350	–	–	–	–
10	–	16	26	42	76	124	150	300	380	470	600	1570	2480
15	–	–	–	–	84	136	165	320	410	505	650	1655	2570
20	–	–	–	–	92	148	180	340	440	540	700	1740	2660
25	–	–	–	–	100	160	195	360	470	575	750	1825	2750

Moving load [g]													
Stroke [mm]	Piston ∅												
	4	6	10	12	16	20	25	32	40	50	63	80	100
2.5	0.2	–	–	–	–	–	–	–	–	–	–	–	–
5	0.25	1.2	2.8	6.6	11	22	27	46	69	–	–	–	–
10	–	1.5	3.3	7.7	13	25	30	51	74	127	178	339	719
15	–	–	–	–	15	28	33	56	79	135	186	351	739
20	–	–	–	–	17	31	36	61	84	143	194	363	759
25	–	–	–	–	19	34	39	66	89	151	202	375	779

Materials

Sectional view

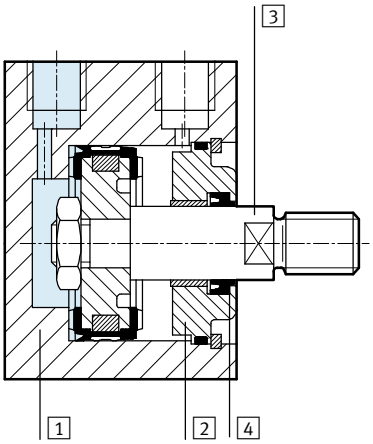

Short-stroke cylinder	∅ 4	∅ 6 ... 100
1 Cylinder barrel	Anodised aluminium	Anodised aluminium
2 Cover cap	Anodised aluminium	Anodised aluminium
3 Piston rod	Anodised aluminium	High-alloy steel
4 Rod seal	Nitrile rubber	Polyurethane
Note on material	Free of copper and PTFE	Free of copper and PTFE

Dimensions Download CAD data ➔ **www.festo.com**

∅ 4 ... 25 mm

ADVC-...-I-P
Piston rod with female thread

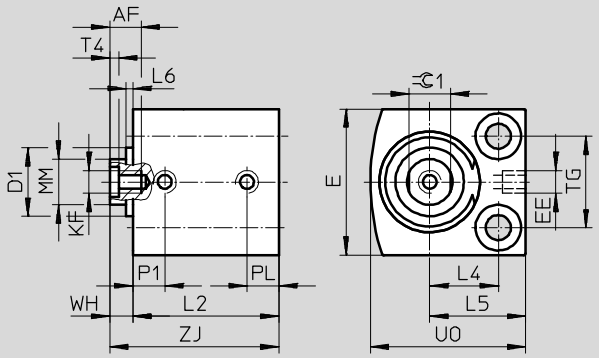

ADVC-...-A-P
Piston rod with male thread

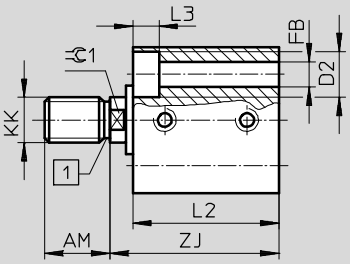

ADVC-...-P
Piston rod without thread

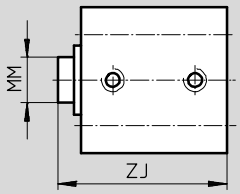

Note

∅ 4 mm
Do not exceed maximum screw-in depth of 3 mm and maximum tightening torque of 0.7 Nm.

∅ 10 mm
Depending on tolerance, the bearing cap may project by up to 0.65 mm.

∅ 12 mm
Depending on tolerance, the bearing cap may project by up to 0.35 mm.

1 No undercut with diameter 4/6/10.

Short-stroke cylinders ADVC

Technical data, double-acting – without position sensing

∅ [mm]	Stroke [mm]	AF min.	AM –0.5	D1 ∅ max.	D2 ∅	E max.	EE	FB ∅	KF	KK	L2 +0.2	L3
4	2.5	–	6	–	3.3 +0.1	10	M3	1.8	–	M2	13	1.8
	5										15.5	
6	5	–	6	–	5 +0.1	13	M3	2.9	–	M3	16	2.9
	10										21	
10	5	–	8	7.5	5.8 +0.1	18	M5	3.4	–	M4	21	3.4
	10										24	
12	5	8	8	10.7	6 H13	20	M5	3.4	M3	M5	23	3.4
	10										28	
16	5	10	12	–	8 H13	25	M5	4.5	M4	M6	23	4.6
	10										28	
	15										33	
	20										38	
	25										43	
20	5	12	12	–	10 H13	32	M5	5.5	M5	M8	27	5.7
	10										32	
	15										37	
	20										42	
	25										47	
25	5	12	12	–	10 H13	38	M5	5.5	M5	M8	27.5	5.7
	10										32.5	
	15										37.5	
	20										42.5	
	25										47.5	

∅ [mm]	Stroke [mm]	L4	L5	L6 max.	MM ∅	P1	PL	T4	TG ±0.1	UO max.	WH	ZJ ±0.8	=C1
4	2.5	4	6.5	–	2	3.7	3.2	–	5.8	10	1	14	–
	5											16.5	
6	5	6	9	–	3	4.7	3	–	7	14	1	17	–
	10											22	
10	5	8	11.5	0.7	4	5.2	5.2	–	11	19	1.5	22.5	–
	10					6	5.5					25.5	
12	5	9	13	0.4	6	5.75	5.75	1.5	13	22	4	27	5
	10					9	6					32	
16	5	11.5	16.5	–	8	6	6	2	15	27	4	27	7
	10					7.5						32	
	15											37	
	20											42	
	25											47	
20	5	15	21	–	10	7.5	7	2	20	34	5	32	9
	10											37	
	15											42	
	20											47	
	25											52	
25	5	15.5	21.5	–	10	8	6.5	2	26	37	5	32.5	9
	10											37.5	
	15											42.5	
	20											47.5	
	25											52.5	

Dimensions Download CAD data ➔ **www.festo.com**

∅ 32 ... 100 mm

ADVC-...-I-P
Piston rod with female thread

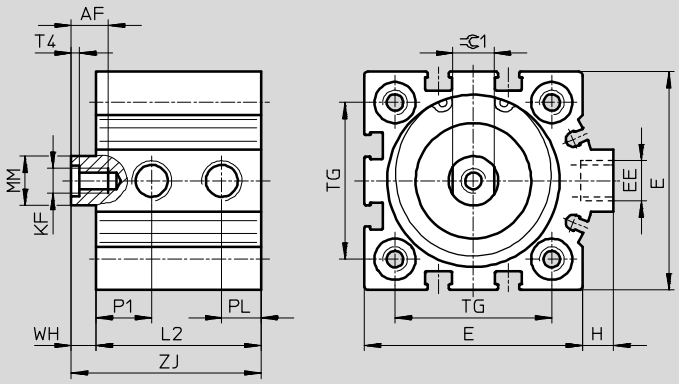

ADVC-...-A-P**
Piston rod with male thread

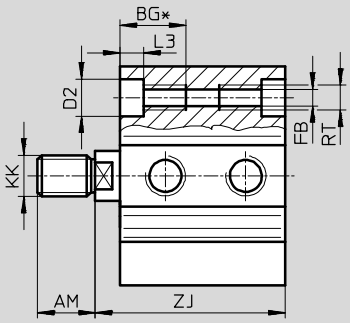

∅ [mm]	AF min.	AM –0.5	BG* min.	D2 ∅ F9	E max.	EE	FB ∅	H	KF	KK
32	12	14	21.7	9	45	G⅛	5.2	7	M6	M10x1.25
40	12	14	21.7	9	53.5	G⅛	5.2	7	M6	M10x1.25
50	16	16	22.8	11	63.5	G⅛	6.8	7	M8	M12x1.25
63	16	16	22.8	11	75	G⅛	6.8	7.5	M8	M12x1.25
80	20	22	25	14	93	G⅛	8.5	7	M10	M16x1.5
100	24	28	25	14	113	G¼	8.5	13	M12	M20x1.5

* Continuous thread with short overall length
** Nut for piston rod thread included in scope of delivery

Short-stroke cylinders ADVC

Technical data, double-acting – without position sensing

∅ [mm]	Stroke [mm]	L2 +0.2	L3	MM ∅	P1	PL	RT	T4	TG ±0.1	WH	ZJ ±0.8	=⊂1
32	5	34	5.7	12	9	8.5	M6	2.6	32.5	6	40	10
	10	39									45	
	15	44									50	
	20	49									55	
	25	54									60	
40	5	34.5	5.7	12	11	9	M6	2.6	38	6	40.5	10
	10	39.5									45.5	
	15	44.5									50.5	
	20	49.5									55.5	
	25	54.5									60.5	
50	10	38	6.8	16	11.3	9.5	M8	3.3	46.5	8	46	13
	15	43									51	
	20	48									56	
	25	53									61	
63	10	45	6.8	16	12.5	11.5	M8	3.3	56.5	8	53	13
	15	50									58	
	20	55									63	
	25	60									68	
80	10	50	9	20	15	15	M10	4.7	72	8	58	17
	15	55									63	
	20	60									68	
	25	65									73	
100	10	59	9	25	16.5	19	M10	6.1	89	10	69	22
	15	64									74	
	20	69									79	
	25	74									84	

Short-stroke cylinders ADVC

Technical data, double-acting – without position sensing

FESTO

Ordering data									
Type	Piston ∅	Stroke	Piston rod with male thread		Piston rod with female thread		Piston rod without thread		
	[mm]	[mm]	Part No.	Type	Part No.	Type	Part No.	Type
	4	2.5	**188054**	**ADVC-4-2,5-A-P**	–		**526897**	**ADVC-4-2,5-P**
		5	**188055**	**ADVC-4-5-A-P**			**526898**	**ADVC-4-5-P**
	6	5	**188066**	**ADVC-6-5-A-P**	–		**526899**	**ADVC-6-5-P**
		10	**188067**	**ADVC-6-10-A-P**			**526900**	**ADVC-6-10-P**
	10	5	**188078**	**ADVC-10-5-A-P**	–		**526903**	**ADVC-10-5-P**
		10	**188079**	**ADVC-10-10-A-P**			**526904**	**ADVC-10-10-P**
	12	5	**188094**	**ADVC-12-5-A-P**	**188090**	**ADVC-12-5-I-P**	**530568**	**ADVC-12-5-P**
		10	**188095**	**ADVC-12-10-A-P**	**188091**	**ADVC-12-10-I-P**	**530569**	**ADVC-12-10-P**
	16	5	**188123**	**ADVC-16-5-A-P**	**188113**	**ADVC-16-5-I-P**	–	
		10	**188124**	**ADVC-16-10-A-P**	**188114**	**ADVC-16-10-I-P**		
		15	**188125**	**ADVC-16-15-A-P**	**188115**	**ADVC-16-15-I-P**		
		20	**188126**	**ADVC-16-20-A-P**	**188116**	**ADVC-16-20-I-P**		
		25	**188127**	**ADVC-16-25-A-P**	**188117**	**ADVC-16-25-I-P**		
	20	5	**188155**	**ADVC-20-5-A-P**	**188145**	**ADVC-20-5-I-P**	–	
		10	**188156**	**ADVC-20-10-A-P**	**188146**	**ADVC-20-10-I-P**		
		15	**188157**	**ADVC-20-15-A-P**	**188147**	**ADVC-20-15-I-P**		
		20	**188158**	**ADVC-20-20-A-P**	**188148**	**ADVC-20-20-I-P**		
		25	**188159**	**ADVC-20-25-A-P**	**188149**	**ADVC-20-25-I-P**		
	25	5	**188187**	**ADVC-25-5-A-P**	**188177**	**ADVC-25-5-I-P**	–	
		10	**188188**	**ADVC-25-10-A-P**	**188178**	**ADVC-25-10-I-P**		
		15	**188189**	**ADVC-25-15-A-P**	**188179**	**ADVC-25-15-I-P**		
		20	**188190**	**ADVC-25-20-A-P**	**188180**	**ADVC-25-20-I-P**		
		25	**188191**	**ADVC-25-25-A-P**	**188181**	**ADVC-25-25-I-P**		

Short-stroke cylinders ADVC

Technical data, double-acting – without position sensing

Ordering data						
Type	Piston ∅	Stroke	Piston rod with male thread		Piston rod with female thread	
	[mm]	[mm]	Part No.	Type	Part No.	Type
	32	5	**188219**	**ADVC-32-5-A-P**	**188209**	**ADVC-32-5-I-P**
		10	**188220**	**ADVC-32-10-A-P**	**188210**	**ADVC-32-10-I-P**
		15	**188221**	**ADVC-32-15-A-P**	**188211**	**ADVC-32-15-I-P**
		20	**188222**	**ADVC-32-20-A-P**	**188212**	**ADVC-32-20-I-P**
		25	**188223**	**ADVC-32-25-A-P**	**188213**	**ADVC-32-25-I-P**
	40	5	**188247**	**ADVC-40-5-A-P**	**188237**	**ADVC-40-5-I-P**
		10	**188248**	**ADVC-40-10-A-P**	**188238**	**ADVC-40-10-I-P**
		15	**188249**	**ADVC-40-15-A-P**	**188239**	**ADVC-40-15-I-P**
		20	**188250**	**ADVC-40-20-A-P**	**188240**	**ADVC-40-20-I-P**
		25	**188251**	**ADVC-40-25-A-P**	**188241**	**ADVC-40-25-I-P**
	50	10	**188272**	**ADVC-50-10-A-P**	**188264**	**ADVC-50-10-I-P**
		15	**188273**	**ADVC-50-15-A-P**	**188265**	**ADVC-50-15-I-P**
		20	**188274**	**ADVC-50-20-A-P**	**188266**	**ADVC-50-20-I-P**
		25	**188275**	**ADVC-50-25-A-P**	**188267**	**ADVC-50-25-I-P**
	63	10	**188296**	**ADVC-63-10-A-P**	**188288**	**ADVC-63-10-I-P**
		15	**188297**	**ADVC-63-15-A-P**	**188289**	**ADVC-63-15-I-P**
		20	**188298**	**ADVC-63-20-A-P**	**188290**	**ADVC-63-20-I-P**
		25	**188299**	**ADVC-63-25-A-P**	**188291**	**ADVC-63-25-I-P**
	80	10	**188320**	**ADVC-80-10-A-P**	**188312**	**ADVC-80-10-I-P**
		15	**188321**	**ADVC-80-15-A-P**	**188313**	**ADVC-80-15-I-P**
		20	**188322**	**ADVC-80-20-A-P**	**188314**	**ADVC-80-20-I-P**
		25	**188323**	**ADVC-80-25-A-P**	**188315**	**ADVC-80-25-I-P**
	100	10	**188344**	**ADVC-100-10-A-P**	**188336**	**ADVC-100-10-I-P**
		15	**188345**	**ADVC-100-15-A-P**	**188337**	**ADVC-100-15-I-P**
		20	**188346**	**ADVC-100-20-A-P**	**188338**	**ADVC-100-20-I-P**
		25	**188347**	**ADVC-100-25-A-P**	**188339**	**ADVC-100-25-I-P**

Short-stroke cylinders ADVC

Technical data, double-acting – with position sensing

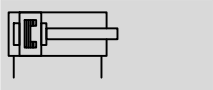

- Ø - Diameter
  6 ... 100 mm

- l - Stroke length
  5 ... 25 mm

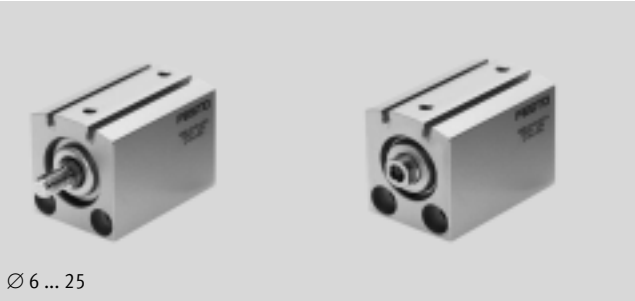

∅ 6 ... 25

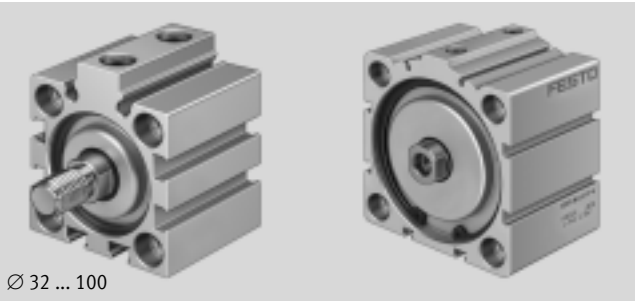

∅ 32 ... 100

General technical data												
Piston ∅	6	10	12	16	20	25	32	40	50	63	80	100
Pneumatic connection	M3	M5	M5	M5	M5	M5	G⅛	G⅛	G⅛	G⅛	G⅛	G¼
Piston rod with female thread	–	–	■	■	■	■	■	■	■	■	■	■
Piston rod with male thread	■	■	■	■	■	■	■	■	■	■	■	■
Piston rod without thread	■	■	■	–	–	–	–	–	–	–	–	–
Operating medium	Compressed air in accordance with ISO 8573-1:2010 [7:4:4]											
Note on operating/pilot medium	Operation with lubricated medium possible (in which case lubricated operation will always be required)											
Constructional design	Piston											
	Piston rod											
Cushioning	Flexible cushioning rings/plates at both ends											
Position sensing	For proximity sensing											
Type of mounting	Via through-holes						Via through-holes					
	–						Via accessories					
Mounting position	Any											

Operating conditions													
Piston ∅		6	10	12	16	20	25	32	40	50	63	80	100
Operating pressure	[bar]	1.5 ... 8	1 ... 8	1 ... 10				0.6 ... 10					
Ambient temperature	[°C]	–20 ... +80 (note operating range of proximity sensors)											
Corrosion resistance class CRC[1)]		1											

1) Corrosion resistance class CRC 1 to Festo standard FN 940070
Low corrosion stress. For dry indoor applications or transport and storage protection. Also applies to parts behind covers, in the non-visible interior area, and parts which are covered in the application (e.g. drive trunnions).

Forces [N] and impact energy [J]												
Piston ∅	6	10	12	16	20	25	32	40	50	63	80	100
Theoretical force at 6 bar, advancing	17	47	68	121	189	295	483	754	1178	1870	3016	4712
Theoretical force at 6 bar, returning	13	40	51	91	141	247	415	686	1056	1750	2847	4418
Max. impact energy at end positions	0.005	0.03	0.06	0.10	0.14	0.18	0.26	0.36	0.60	0.64	0.90	1.20

Product weight [g]												
Stroke [mm]	Piston ∅											
	6	10	12	16	20	25	32	40	50	63	80	100
5	20	37	70	98	162	195	320	460	–	–	–	–
10	23	45	79	106	174	210	340	490	630	710	1940	2970
15	–	–	–	114	186	225	360	520	665	760	2025	3060
20	–	–	–	122	198	240	380	550	700	810	2110	3150
25	–	–	–	130	210	255	400	580	735	860	2195	3240

Moving load [g]												
Stroke [mm]	Piston ∅											
	6	10	12	16	20	25	32	40	50	63	80	100
5	1.7	3.2	8.5	15	26	32	50	66	–	–	–	–
10	2	3.7	9.6	17	29	35	55	71	116	158	289	555
15	–	–	–	19	32	38	60	76	124	166	301	575
20	–	–	–	21	35	41	65	81	132	174	313	595
25	–	–	–	23	38	44	70	86	140	182	325	615

Materials

Sectional view

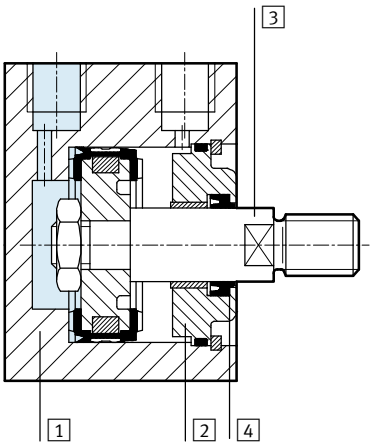

Short-stroke cylinder		
1	Cylinder barrel	Anodised aluminium
2	Cover cap	Anodised aluminium
3	Piston rod	High-alloy steel
4	Rod seal	Polyurethane
	Note on material	Free of copper and PTFE

Dimensions Download CAD data ➔ **www.festo.com**

∅ 6 ... 25 mm

ADVC-...-I-P-A
Piston rod with female thread

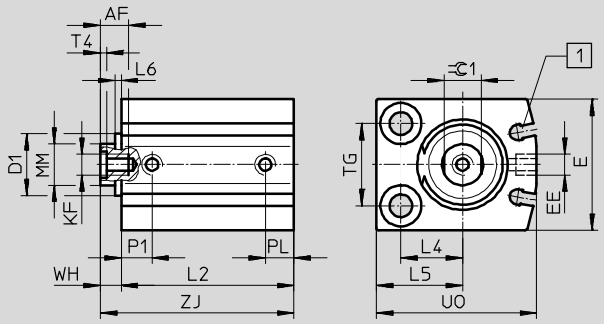

ADVC-...-A-P-A
Piston rod with male thread

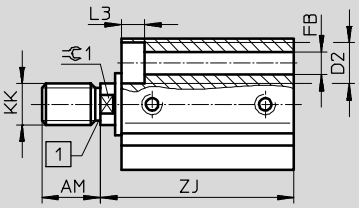

ADVC-...-P-A
Piston rod without thread

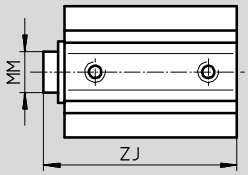

Note

∅ 10 mm
Depending on tolerance, the bearing cap may project by up to 0.65 mm.

∅ 12 mm
Depending on tolerance, the bearing cap may project by up to 0.35 mm.

1 No undercut with diameter 6/10.

1 Slot for proximity sensor SME/SMT-10

∅ [mm]	Stroke [mm]	AF min.	AM –0.5	D1 ∅ max.	D2 ∅	E max.	EE	FB ∅	KF	KK	L2 +0.2	L3
6	5	–	6	–	5 +0.1	16	M3	2.9	–	M3	25.5	2.9
	10										30.5	
10	5	–	8	7.5	5.8 +0.1	21	M5	3.4	–	M4	27	3.4
	10										32	
12	5	8	8	10.7	6 H13	24	M5	3.4	M3	M5	36	3.4
	10										41	
16	5	10	12	–	8 H13	28	M5	4.5	M4	M6	35	4.6
	10										40	
	15										45	
	20										50	
	25										55	
20	5	12	12	–	10 H13	32	M5	5.5	M5	M8	37	5.7
	10										42	
	15										47	
	20										52	
	25										57	
25	5	12	12	–	10 H13	38	M5	5.5	M5	M8	37	5.7
	10										42	
	15										47	
	20										52	
	25										57	

Short-stroke cylinders ADVC

Technical data, double-acting – with position sensing

∅ [mm]	Stroke [mm]	L4	L5	L6 max.	MM ∅	P1	PL	T4	TG ±0.1	UO max.	WH	ZJ ±0.8	⌭1
6	5	5	8	–	3	5.2	3	–	10	16	1	26.5	–
	10											31.5	
10	5	7	10.5	0.7	4	6	6	–	14	22	1.5	28.5	–
	10											33.5	
12	5	8	12	0.4	6	7	6	1.5	16	26	4	40	5
	10											45	
16	5	12	17	–	8	8	6	2	18	32	4	39	7
	10											44	
	15											49	
	20											54	
	25											59	
20	5	15	21	–	10	7.5	7	2	20	39	5	42	9
	10											47	
	15											52	
	20											57	
	25											62	
25	5	15.5	21.5	–	10	10	6	2	26	42	5	42	9
	10											47	
	15											52	
	20											57	
	25											62	

Dimensions Download CAD data ➔ **www.festo.com**

∅ 32 ... 100 mm

ADVC-...-I-P-A

Piston rod with female thread

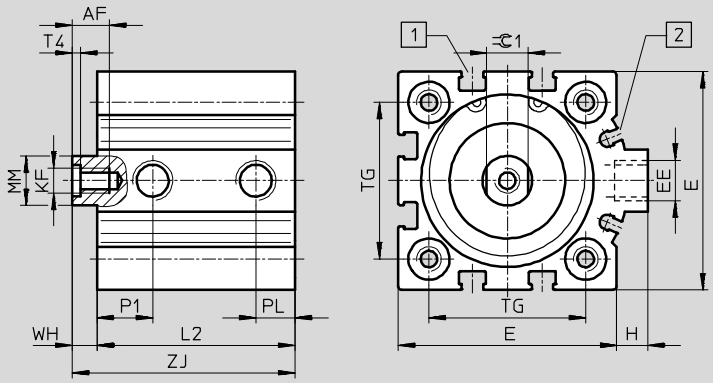

ADVC-...-A-P-A**

Piston rod with male thread

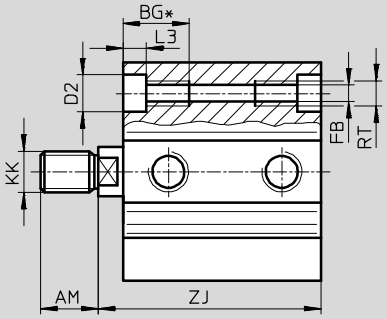

1 Slot for proximity sensor SME/SMT-8

2 Slot for proximity sensor SME/SMT-10

∅ [mm]	AF min.	AM –0.5	BG* min.	D2 ∅ F9	E max.	EE	FB ∅	H	KF	KK
32	12	14	21.7	9	45	G⅛	5.2	7	M6	M10x1.25
40	12	14	21.7	9	53.5	G⅛	5.2	7	M6	M10x1.25
50	16	16	22.8	11	63.5	G⅛	6.8	7	M8	M12x1.25
63	16	16	22.8	11	75	G⅛	6.8	7.5	M8	M12x1.25
80	20	22	25	14	93	G⅛	8.5	7	M10	M16x1.5
100	24	28	25	14	113	G¼	8.5	13	M12	M20x1.5

* Continuous thread with short overall length

** Nut for piston rod thread included in scope of delivery

Short-stroke cylinders ADVC

Technical data, double-acting – with position sensing

∅ [mm]	Stroke [mm]	L2 +0.2	L3	MM ∅	P1	PL	RT	T4	TG ±0.1	WH	ZJ ±0.8	⌭1
32	5	38	5.7	12	9	8.5	M6	2.6	32.5	6	44	10
	10	43									49	
	15	48									54	
	20	53									59	
	25	58									64	
40	5	43	5.7	12	13.5	9.5	M6	2.6	38	6	49	10
	10	48									54	
	15	53									59	
	20	58									64	
	25	63									69	
50	10	48	6.8	16	11.3	9.5	M8	3.3	46.5	8	56	13
	15	53									61	
	20	58									66	
	25	63									71	
63	10	51	6.8	16	12.5	10.5	M8	3.3	56.5	8	59	13
	15	56									64	
	20	61									69	
	25	66									74	
80	10	59	9	20	15	8.5	M10	4.7	72	8	67	17
	15	64									72	
	20	69									77	
	25	74									82	
100	10	68	9	25	16.5	10.5	M10	6.1	89	10	78	22
	15	73									83	
	20	78									88	
	25	83									93	

Short-stroke cylinders ADVC

Technical data, double-acting – with position sensing

FESTO

Ordering data										
Type	Piston ∅	Stroke	Piston rod with male thread			Piston rod with female thread			Piston rod without thread	
	[mm]	[mm]	Part No.	Type		Part No.	Type		Part No.	Type
	6	5	**188064**	**ADVC-6-5-A-P-A**		–			**526901**	**ADVC-6-5-P-A**
		10	**188065**	**ADVC-6-10-A-P-A**					**526902**	**ADVC-6-10-P-A**
	8									
	10	5	**188076**	**ADVC-10-5-A-P-A**		–			**526905**	**ADVC-10-5-P-A**
		10	**188077**	**ADVC-10-10-A-P-A**					**526906**	**ADVC-10-10-P-A**
	12	5	**188092**	**ADVC-12-5-A-P-A**		**188088**	**ADVC-12-5-I-P-A**		**530572**	**ADVC-12-5-P-A**
		10	**188093**	**ADVC-12-10-A-P-A**		**188089**	**ADVC-12-10-I-P-A**		**530573**	**ADVC-12-10-P-A**
	16	5	**188118**	**ADVC-16-5-A-P-A**		**188108**	**ADVC-16-5-I-P-A**		–	
		10	**188119**	**ADVC-16-10-A-P-A**		**188109**	**ADVC-16-10-I-P-A**			
		15	**188120**	**ADVC-16-15-A-P-A**		**188110**	**ADVC-16-15-I-P-A**			
		20	**188121**	**ADVC-16-20-A-P-A**		**188111**	**ADVC-16-20-I-P-A**			
		25	**188122**	**ADVC-16-25-A-P-A**		**188112**	**ADVC-16-25-I-P-A**			
	20	5	**188150**	**ADVC-20-5-A-P-A**		**188140**	**ADVC-20-5-I-P-A**		–	
		10	**188151**	**ADVC-20-10-A-P-A**		**188141**	**ADVC-20-10-I-P-A**			
		15	**188152**	**ADVC-20-15-A-P-A**		**188142**	**ADVC-20-15-I-P-A**			
		20	**188153**	**ADVC-20-20-A-P-A**		**188143**	**ADVC-20-20-I-P-A**			
		25	**188154**	**ADVC-20-25-A-P-A**		**188144**	**ADVC-20-25-I-P-A**			
	25	5	**188182**	**ADVC-25-5-A-P-A**		**188172**	**ADVC-25-5-I-P-A**		–	
		10	**188183**	**ADVC-25-10-A-P-A**		**188173**	**ADVC-25-10-I-P-A**			
		15	**188184**	**ADVC-25-15-A-P-A**		**188174**	**ADVC-25-15-I-P-A**			
		20	**188185**	**ADVC-25-20-A-P-A**		**188175**	**ADVC-25-20-I-P-A**			
		25	**188186**	**ADVC-25-25-A-P-A**		**188176**	**ADVC-25-25-I-P-A**			

Short-stroke cylinders ADVC

Technical data, double-acting – with position sensing

FESTO

Ordering data						
Type	Piston ∅	Stroke	Piston rod with male thread		Piston rod with female thread	
	[mm]	[mm]	Part No.	Type	Part No.	Type
	32	5	**188214**	**ADVC-32-5-A-P-A**	**188204**	**ADVC-32-5-I-P-A**
		10	**188215**	**ADVC-32-10-A-P-A**	**188205**	**ADVC-32-10-I-P-A**
		15	**188216**	**ADVC-32-15-A-P-A**	**188206**	**ADVC-32-15-I-P-A**
		20	**188217**	**ADVC-32-20-A-P-A**	**188207**	**ADVC-32-20-I-P-A**
		25	**188218**	**ADVC-32-25-A-P-A**	**188208**	**ADVC-32-25-I-P-A**
	40	5	**188242**	**ADVC-40-5-A-P-A**	**188232**	**ADVC-40-5-I-P-A**
		10	**188243**	**ADVC-40-10-A-P-A**	**188233**	**ADVC-40-10-I-P-A**
		15	**188244**	**ADVC-40-15-A-P-A**	**188234**	**ADVC-40-15-I-P-A**
		20	**188245**	**ADVC-40-20-A-P-A**	**188235**	**ADVC-40-20-I-P-A**
		25	**188246**	**ADVC-40-25-A-P-A**	**188236**	**ADVC-40-25-I-P-A**
	50	10	**188268**	**ADVC-50-10-A-P-A**	**188260**	**ADVC-50-10-I-P-A**
		15	**188269**	**ADVC-50-15-A-P-A**	**188261**	**ADVC-50-15-I-P-A**
		20	**188270**	**ADVC-50-20-A-P-A**	**188262**	**ADVC-50-20-I-P-A**
		25	**188271**	**ADVC-50-25-A-P-A**	**188263**	**ADVC-50-25-I-P-A**
	63	10	**188292**	**ADVC-63-10-A-P-A**	**188284**	**ADVC-63-10-I-P-A**
		15	**188293**	**ADVC-63-15-A-P-A**	**188285**	**ADVC-63-15-I-P-A**
		20	**188294**	**ADVC-63-20-A-P-A**	**188286**	**ADVC-63-20-I-P-A**
		25	**188295**	**ADVC-63-25-A-P-A**	**188287**	**ADVC-63-25-I-P-A**
	80	10	**188316**	**ADVC-80-10-A-P-A**	**188308**	**ADVC-80-10-I-P-A**
		15	**188317**	**ADVC-80-15-A-P-A**	**188309**	**ADVC-80-15-I-P-A**
		20	**188318**	**ADVC-80-20-A-P-A**	**188310**	**ADVC-80-20-I-P-A**
		25	**188319**	**ADVC-80-25-A-P-A**	**188311**	**ADVC-80-25-I-P-A**
	100	10	**188340**	**ADVC-100-10-A-P-A**	**188332**	**ADVC-100-10-I-P-A**
		15	**188341**	**ADVC-100-15-A-P-A**	**188333**	**ADVC-100-15-I-P-A**
		20	**188342**	**ADVC-100-20-A-P-A**	**188334**	**ADVC-100-20-I-P-A**
		25	**188343**	**ADVC-100-25-A-P-A**	**188335**	**ADVC-100-25-I-P-A**

Short-stroke cylinders AEVC

Technical data, single-acting – without position sensing

- Ø - Diameter
  4 ... 100 mm

- l - Stroke length
  2.5 ... 25 mm

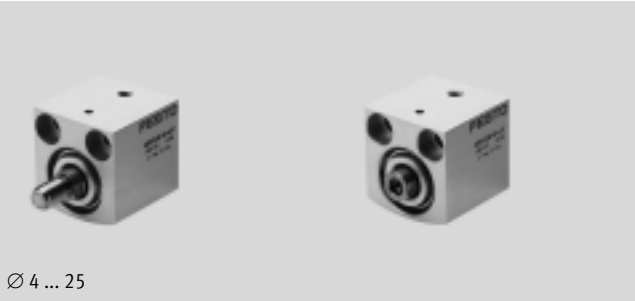

∅ 4 ... 25

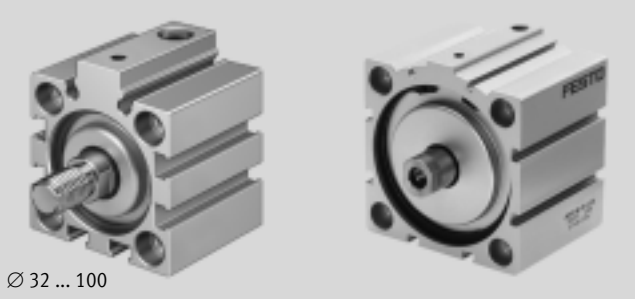

∅ 32 ... 100

General technical data													
Piston ∅	4	6	10	12	16	20	25	32	40	50	63	80	100
Pneumatic connection	M3	M3	M5	M5	M5	M5	M5	G⅛	G⅛	G⅛	G⅛	G⅛	G¼
Piston rod with female thread	–	–	–	■	■	■	■	■	■	■	■	■	■
Piston rod with male thread	■	■	■	■	■	■	■	■	■	■	■	■	■
Piston rod without thread	■	■	■	■	–	–	–	–	–	–	–	–	–
Operating medium	Compressed air in accordance with ISO 8573-1:2010 [7:4:4]												
Note on operating/pilot medium	Operation with lubricated medium possible (in which case lubricated operation will always be required)												
Constructional design	Piston												
	Piston rod												
Cushioning	Flexible cushioning rings/plates at both ends												
Type of mounting	Via through-holes							Via through-holes					
	–							Via accessories					
Mounting position	Any												

Operating conditions														
Piston ∅		4	6	10	12	16	20	25	32	40	50	63	80	100
Operating pressure	[bar]	2.5 ... 8	2 ... 8	1.5 ... 8	1.5 ... 10				1 ... 10					
Ambient temperature	[°C]	–20 ... +80												
Corrosion resistance class CRC[1)]		1												

1) Corrosion resistance class CRC 1 to Festo standard FN 940070
Low corrosion stress. For dry indoor applications or transport and storage protection. Also applies to parts behind covers, in the non-visible interior area, and parts which are covered in the application (e.g. drive trunnions).

Short-stroke cylinders AEVC

Technical data, single-acting – without position sensing

Forces [N] and impact energy [J]													
Piston ∅	4	6	10	12	16	20	25	32	40	50	63	80	100
Theoretical force at 6 bar, advancing	5	11	41	59	105	170	270	450	700	1120	1800	2900	4500
Theoretical force at 6 bar, returning	1	3	3	4	5	10[1)]	15	22	28	40	50	85	140
Max. impact energy at end positions	0.003	0.005	0.03	0.06	0.10	0.14	0.18	0.26	0.36	0.60	0.64	0.90	1.20

1) AEVC-20-5-... = 5 N

Note	The degree of friction depends upon the mounting position, and the type of load involved. Single-acting cylinders should as far as possible be operated without lateral forces.

Product weight [g]													
Stroke [mm]	Piston ∅												
	4	6	10	12	16	20	25	32	40	50	63	80	100
2.5	3.7	–	–	–	–	–	–	–	–	–	–	–	–
5	4.5	12	17	24	60	85	130	220	–	–	–	–	–
10	–	18	24	40	80	130	160	290	370	410	490	1900	2850
25	–	–	–	–	150	200	250	400	560	680	770	2400	3500

Moving load [g]													
Stroke [mm]	Piston ∅												
	4	6	10	12	16	20	25	32	40	50	63	80	100
2.5	0.15	–	–	–	–	–	–	–	–	–	–	–	–
5	0.2	1	2	4.4	8	14	22	40	–	–	–	–	–
10	–	1.4	2.6	6.9	11	21	25	48	65	105	157	327	678
25	–	–	–	–	19	32	37	62	83	140	191	365	739

Materials

Sectional view

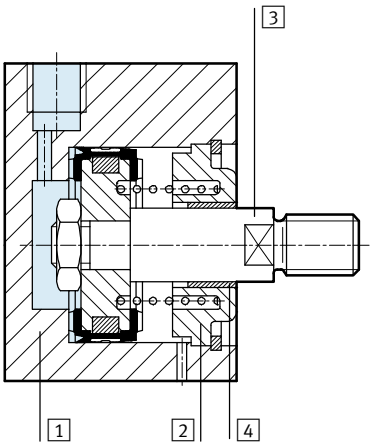

Short-stroke cylinder	∅ 4	∅ 6 ... 100
1 Cylinder barrel	Anodised aluminium	Anodised aluminium
2 Cover cap	Anodised aluminium	Anodised aluminium
3 Piston rod	Anodised aluminium	High-alloy steel
4 Rod seal	Nitrile rubber	Polyurethane
Note on material	Free of copper and PTFE	Free of copper and PTFE

Dimensions Download CAD data ➔ **www.festo.com**

∅ 4 ... 25 mm

AEVC-...-I-P

Piston rod with female thread

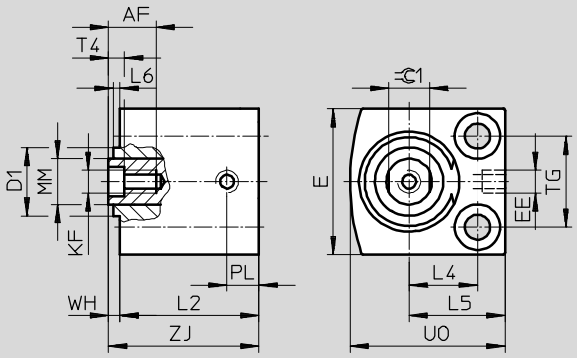

AEVC-...-A-P

Piston rod with male thread

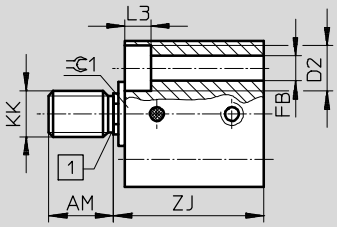

AEVC-...-P

Piston rod without thread

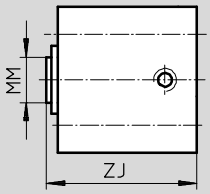

Note

∅ 10 mm

Depending on tolerance, the bearing cap may project by up to 0.65 mm.

∅ 12 mm

Depending on tolerance, the bearing cap may project by up to 0.35 mm.

1 No undercut with diameter 4/6/10.

Short-stroke cylinders AEVC

Technical data, single-acting – without position sensing

∅ [mm]	Stroke [mm]	AF min.	AM –0.5	D1 ∅ max.	D2 ∅	E max.	EE	FB ∅	KF	KK	L2 +0.2	L3
4	2.5	–	6	–	$3.3^{+0.1}$	10	M3	1.8	–	M2	13	1.8
	5										15.5	
6	5	–	6	–	$5^{+0.1}$	13	M3	2.9	–	M3	16	2.9
	10										23.4	
10	5	–	8	7.5	$5.8^{+0.1}$	18	M5	3.4	–	M4	16	3.4
	10										23	
12	5	8	8	10.7	6^{H13}	20	M5	3.4	M3	M5	16	3.4
	10										27.5	
16	5	10	12	–	8^{H13}	25	M5	4.5	M4	M6	20	4.6
	10										27.5	
	25										47	
20	5	8	12	–	10^{H13}	32	M5	5.5	M5	M8	20	5.7
	10	12									30.5	
	25										48.5	
25	5	12	12	–	10^{H13}	38	M5	5.5	M5	M8	26.1	5.7
	10										31.1	
	25										50.2	

∅ [mm]	Stroke [mm]	L4	L5	L6 max.	MM ∅	PL	T4	TG ±0.1	UO max.	WH	ZJ ±0.8	⇌1
4	2.5	4	6.5	–	2	3.2	–	5.8	10	1	14	–
	5										16.5	
6	5	6	9	–	3	3	–	7	14	1	17	–
	10										24.4	
10	5	8	11.5	0.7	4	5.5	–	11	19	1	17	–
	10										24	
12	5	9	13	0.4	6	6	1.5	13	22	1	17	–
	10										28.5	
16	5	11.5	16.5	–	8	6	2	15	27	1	21	7
	10										28.5	
	25										48	
20	5	15	21	–	10	7	2	20	34	1	21	9
	10										31.5	
	25										49.5	
25	5	15.5	21.5	–	10	6.5	2	26	37	1	27.1	9
	10										32.1	
	25										51.2	

Dimensions Download CAD data ➔ **www.festo.com**

∅ 32 ... 100 mm

AEVC-...-I-P

Piston rod with female thread

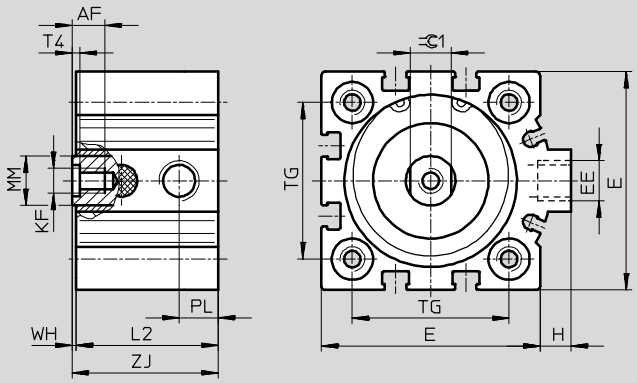

AEVC-...-A-P**

Piston rod with male thread

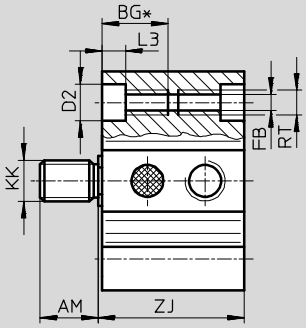

∅ [mm]	Stroke [mm]	AF min.	AM –0.5	BG* min.	D2 ∅ F9	E max.	EE	FB ∅	H	KF	KK	L2 +0.2	L3	MM ∅	PL	RT	T4	TG ±0.1	WH	ZJ ±0.8	⌀1
32	5	12	14	21.7	9	45	G⅛	5.2	7	M6	M10x1.25	26	5.7	12	9.5	M6	2.6	32.5	1	27	10
	10											35								36	
	25											50								51	
40	10	12	14	21.7	9	53.5	G⅛	5.2	7	M6	M10x1.25	34.5	5.7	12	9.5	M6	2.6	38	1	35.5	10
	25											54.5								55.5	
50	10	16	16	22.8	11	63.5	G⅛	6.8	7	M8	M12x1.25	30.6	6.8	16	9.5	M8	3.3	46.5	0.5	31.1	13
	25											53								53.5	
63	10	16	16	22.8	11	75	G⅛	6.8	7.5	M8	M12x1.25	35	6.8	16	11.5	M8	3.3	56.5	1	36	13
	25											57								58	
80	10	20	22	25	14	93	G⅛	8.5	7	M10	M16x1.5	52	9	20	15	M10	4.7	72	1	53	17
	25											67								68	
100	10	24	28	25	14	113	G¼	8.5	13	M12	M20x1.5	59	9	25	19	M10	6.1	89	1	60	22
	25											74								75	

* Continuous thread with short overall length

** Nut for piston rod thread included in scope of delivery

Short-stroke cylinders AEVC

Technical data, single-acting – without position sensing

FESTO

Ordering data								
Type	Piston ∅ [mm]	Stroke [mm]	Piston rod with male thread Part No.	Type	Piston rod with female thread Part No.	Type	Piston rod without thread Part No.	Type
	4	2.5	188052	AEVC-4-2,5-A-P	–		188050	AEVC-4-2,5-P
		5	188053	AEVC-4-5-A-P			188051	AEVC-4-5-P
	6	5	188062	AEVC-6-5-A-P	–		188058	AEVC-6-5-P
		10	188063	AEVC-6-10-A-P			188059	AEVC-6-10-P
	10	5	188074	AEVC-10-5-A-P	–		188070	AEVC-10-5-P
		10	188075	AEVC-10-10-A-P			188071	AEVC-10-10-P
	12	5	188086	AEVC-12-5-A-P	188082	AEVC-12-5-I-P	530566	AEVC-12-5-P
		10	188087	AEVC-12-10-A-P	188083	AEVC-12-10-I-P	530567	AEVC-12-10-P
	16	5	188105	AEVC-16-5-A-P	188099	AEVC-16-5-I-P	–	
		10	188106	AEVC-16-10-A-P	188100	AEVC-16-10-I-P		
		25	188107	AEVC-16-25-A-P	188101	AEVC-16-25-I-P		
	20	5	188137	AEVC-20-5-A-P	188131	AEVC-20-5-I-P	–	
		10	188138	AEVC-20-10-A-P	188132	AEVC-20-10-I-P		
		25	188139	AEVC-20-25-A-P	188133	AEVC-20-25-I-P		
	25	5	188169	AEVC-25-5-A-P	188163	AEVC-25-5-I-P	–	
		10	188170	AEVC-25-10-A-P	188164	AEVC-25-10-I-P		
		25	188171	AEVC-25-25-A-P	188165	AEVC-25-25-I-P		

Ordering data						
Type	Piston ∅ [mm]	Stroke [mm]	Piston rod with male thread Part No.	Type	Piston rod with female thread Part No.	Type
	32	5	188201	AEVC-32-5-A-P	188195	AEVC-32-5-I-P
		10	188202	AEVC-32-10-A-P	188196	AEVC-32-10-I-P
		25	188203	AEVC-32-25-A-P	188197	AEVC-32-25-I-P
	40	10	188230	AEVC-40-10-A-P	188226	AEVC-40-10-I-P
		25	188231	AEVC-40-25-A-P	188227	AEVC-40-25-I-P
	50	10	188258	AEVC-50-10-A-P	188254	AEVC-50-10-I-P
		25	188259	AEVC-50-25-A-P	188255	AEVC-50-25-I-P
	63	10	188282	AEVC-63-10-A-P	188278	AEVC-63-10-I-P
		25	188283	AEVC-63-25-A-P	188279	AEVC-63-25-I-P
	80	10	188306	AEVC-80-10-A-P	188302	AEVC-80-10-I-P
		25	188307	AEVC-80-25-A-P	188303	AEVC-80-25-I-P
	100	10	188330	AEVC-100-10-A-P	188326	AEVC-100-10-I-P
		25	188331	AEVC-100-25-A-P	188327	AEVC-100-25-I-P

Short-stroke cylinders AEVC

Technical data, single-acting – with position sensing

- Ø - Diameter
  6 ... 100 mm

- l - Stroke length
  5 ... 25 mm

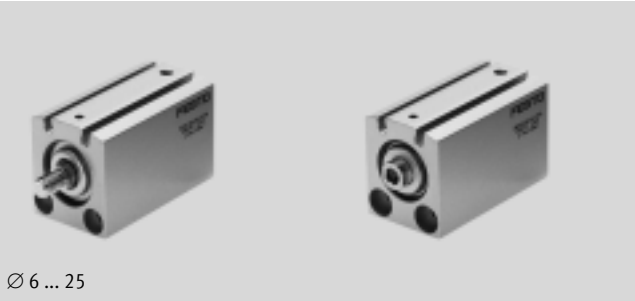

∅ 6 ... 25

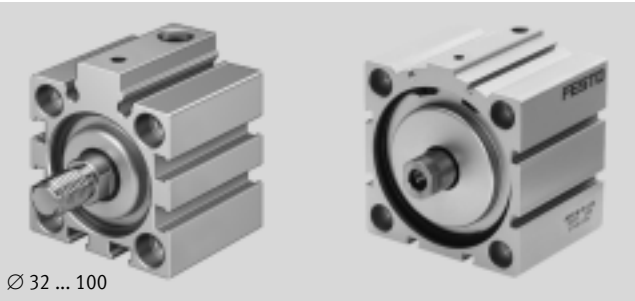

∅ 32 ... 100

General technical data												
Piston ∅	6	10	12	16	20	25	32	40	50	63	80	100
Pneumatic connection	M3	M5	M5	M5	M5	M5	G⅛	G⅛	G⅛	G⅛	G⅛	G¼
Piston rod with female thread	–	–	■	■	■	■	■	■	■	■	■	■
Piston rod with male thread	■	■	■	■	■	■	■	■	■	■	■	■
Piston rod without thread	■	■	■	–	–	–	–	–	–	–	–	–
Operating medium	Compressed air in accordance with ISO 8573-1:2010 [7:4:4]											
Note on operating/pilot medium	Operation with lubricated medium possible (in which case lubricated operation will always be required)											
Constructional design	Piston											
	Piston rod											
Cushioning	Flexible cushioning rings/plates at both ends											
Position sensing	For proximity sensing											
Type of mounting	Via through-holes						Via through-holes					
	–						Via accessories					
Mounting position	Any											

Operating conditions													
Piston ∅		6	10	12	16	20	25	32	40	50	63	80	100
Operating pressure	[bar]	2 ... 8	1.5 ... 8	1.5 ... 10				1 ... 10					
Ambient temperature	[°C]	–20 ... +80 (note operating range of proximity sensors)											
Corrosion resistance class CRC[1)]		1											

1) Corrosion resistance class CRC 1 to Festo standard FN 940070
Low corrosion stress. For dry indoor applications or transport and storage protection. Also applies to parts behind covers, in the non-visible interior area, and parts which are covered in the application (e.g. drive trunnions).

Short-stroke cylinders AEVC

Technical data, single-acting – with position sensing

Forces [N] and impact energy [J]												
Piston ∅	6	10	12	16	20	25	32	40	50	63	80	100
Theoretical force at 6 bar, advancing	11	41	59	105	170	270	450	700	1120	1800	2900	4500
Theoretical force at 6 bar, returning	3	3	4	5	10[1)]	15	22	28	40	50	85	140
Max. impact energy at end positions	0.005	0.03	0.06	0.10	0.14	0.18	0.26	0.36	0.60	0.64	0.90	1.20

1) AEVC-20-5-... = 5 N

Note	The degree of friction depends upon the mounting position, and the type of load involved. Single-acting cylinders should as far as possible be operated without lateral forces.

Product weight [g]												
Stroke [mm]	Piston ∅											
	6	10	12	16	20	25	32	40	50	63	80	100
5	19	37	70	95	160	195	320	–	–	–	–	–
10	23	44	79	105	170	205	340	490	630	720	1940	2970
25	–	–	–	130	200	250	390	580	730	870	3290	3220

Moving load [g]												
Stroke [mm]	Piston ∅											
	6	10	12	16	20	25	32	40	50	63	80	100
5	1.5	3	8.5	15	26	32	49	–	–	–	–	–
10	1.8	3.5	9.5	17	29	35	54	70	116	155	284	546
25	–	–	–	26	40	47	67	83	140	179	321	604

Materials

Sectional view

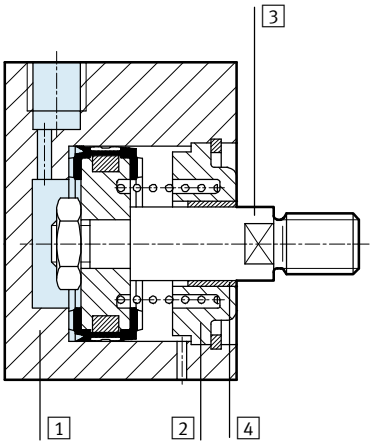

Short-stroke cylinder		
1	Cylinder barrel	Anodised aluminium
2	Cover cap	Anodised aluminium
3	Piston rod	High-alloy steel
4	Rod seal	Polyurethane
	Note on material	Free of copper and PTFE

Dimensions Download CAD data ➔ **www.festo.com**

∅ 6 ... 25 mm

AEVC-...-I-P-A
Piston rod with female thread

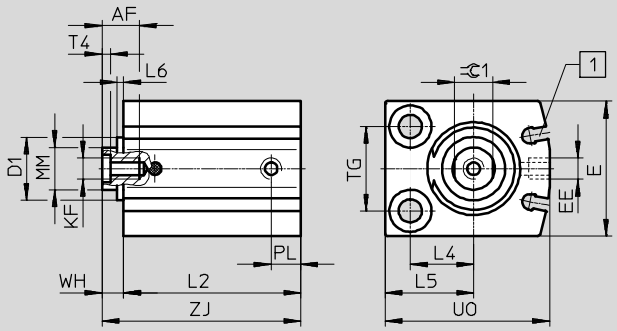

AEVC-...-A-P-A
Piston rod with male thread

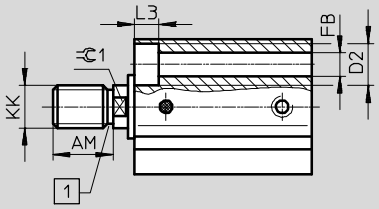

AEVC-...-P-A
Piston rod without thread

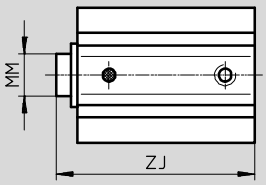

Note

∅ 10 mm
Depending on tolerance, the bearing cap may project by up to 0.65 mm.

∅ 12 mm
Depending on tolerance, the bearing cap may project by up to 0.35 mm.

1 No undercut with diameter 6/10.

1 Slot for proximity sensor SME/SMT-10

Short-stroke cylinders AEVC

Technical data, single-acting – with position sensing

∅ [mm]	Stroke [mm]	AF min.	AM –0.5	D1 ∅ max.	D2 ∅	E max.	EE	FB ∅	KF	KK	L2 +0.2	L3
6	5	–	6	–	5 +0.1	16	M3	2.9	–	M3	25.5	2.9
	10										30.5	
10	5	–	8	7.5	5.8 +0.1	21	M5	3.4	–	M4	27	3.4
	10										32	
12	5	8	8	10.7	6 H13	24	M5	3.4	M3	M5	36	3.4
	10										41	
16	5	10	12	–	8 H13	28	M5	4.5	M4	M6	35	4.6
	10										40	
	25										59.5	
20	5	12	12	–	10 H13	32	M5	5.5	M5	M8	37	5.7
	10										42	
	25										60	
25	5	12	12	–	10 H13	38	M5	5.5	M5	M8	37	5.7
	10										42	
	25										61.1	

∅ [mm]	Stroke [mm]	L4	L5	L6 max.	MM ∅	PL	T4	TG ±0.1	UO max.	WH	ZJ ±0.8	⌯1
6	5	5	8	–	3	3	–	10	16	1	26.5	–
	10										31.5	
10	5	7	10.5	0.7	4	6	–	14	22	1.5	28.5	–
	10										33.5	
12	5	8	12	0.4	6	6	1.5	16	26	4	40	5
	10										45	
16	5	12	17	–	8	6	2	18	32	4	39	7
	10										44	
	25										63.5	
20	5	15	21	–	10	7	2	20	39	5	42	9
	10										47	
	25										65	
25	5	15.5	21.5	–	10	6	2	26	42	5	42	9
	10										47	
	25										66.1	

Short-stroke cylinders AEVC

Technical data, single-acting – with position sensing

Dimensions Download CAD data ➔ **www.festo.com**

∅ 32 ... 100 mm

AEVC-...-I-P-A

Piston rod with female thread

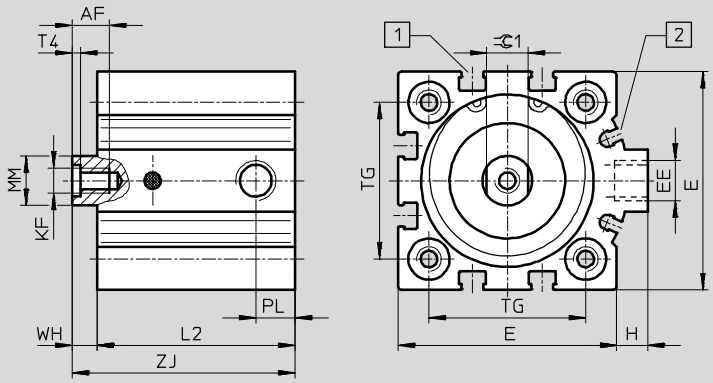

AEVC-...-A-P-A**

Piston rod with male thread

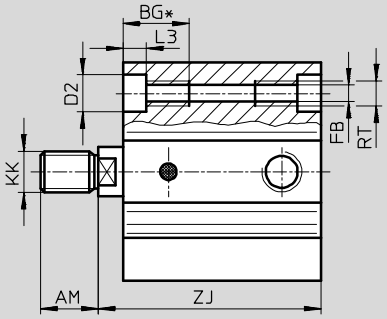

1 Slot for proximity sensor SME/SMT-8

2 Slot for proximity sensor SME/SMT-10

∅	Stroke [mm]	AF min.	AM −0.5	BG* min.	D2 ∅ F9	E max.	EE	FB ∅	H	KF	KK	L2 +0.2	L3	MM ∅	PL	RT	T4	TG ±0.1	WH	ZJ ±0.8	⌯1
32	5	12	14	21.7	9	45	G⅛	5.2	7	M6	M10x1.25	38	5.7	12	8.5	M6	2.6	32.5	6	44	10
	10											43								49	
	25											58								64	
40	10	12	14	21.7	9	53.5	G⅛	5.2	7	M6	M10x1.25	48	5.7	12	9.5	M6	2.6	38	6	54	10
	25											63								69	
50	10	16	16	22.8	11	63.5	G⅛	6.8	7	M8	M12x1.25	50	6.8	16	9.5	M8	3.3	46.5	8	58	13
	25											65								73	
63	10	16	16	22.8	11	75	G⅛	6.8	7.5	M8	M12x1.25	51	6.8	16	10.5	M8	3.3	56.5	8	59	13
	25											66								74	
80	10	20	22	25	14	93	G⅛	8.5	7	M10	M16x1.5	59	9	20	8.5	M10	4.7	72	8	67	17
	25											74								82	
100	10	24	28	25	14	113	G¼	8.5	13	M12	M20x1.5	68	9	25	10.5	M10	6.1	89	10	78	22
	25											83								93	

* Continuous thread with short overall length

** Nut for piston rod thread included in scope of delivery

Short-stroke cylinders AEVC

Technical data, single-acting – with position sensing

FESTO

Ordering data

Type	Piston ∅ [mm]	Stroke [mm]	Piston rod with male thread Part No.	Type	Piston rod with female thread Part No.	Type	Piston rod without thread Part No.	Type
	6	5	**188060**	**AEVC-6-5-A-P-A**	–		**188056**	**AEVC-6-5-P-A**
		10	**188061**	**AEVC-6-10-A-P-A**			**188057**	**AEVC-6-10-P-A**
	10	5	**188072**	**AEVC-10-5-A-P-A**	–		**188068**	**AEVC-10-5-P-A**
		10	**188073**	**AEVC-10-10-A-P-A**			**188069**	**AEVC-10-10-P-A**
	12	5	**188084**	**AEVC-12-5-A-P-A**	**188080**	**AEVC-12-5-I-P-A**	**530570**	**AEVC-12-5-P-A**
		10	**188085**	**AEVC-12-10-A-P-A**	**188081**	**AEVC-12-10-I-P-A**	**530571**	**AEVC-12-10-P-A**
	16	5	**188102**	**AEVC-16-5-A-P-A**	**188096**	**AEVC-16-5-I-P-A**	–	
		10	**188103**	**AEVC-16-10-A-P-A**	**188097**	**AEVC-16-10-I-P-A**		
		25	**188104**	**AEVC-16-25-A-P-A**	**188098**	**AEVC-16-25-I-P-A**		
	20	5	**188134**	**AEVC-20-5-A-P-A**	**188128**	**AEVC-20-5-I-P-A**	–	
		10	**188135**	**AEVC-20-10-A-P-A**	**188129**	**AEVC-20-10-I-P-A**		
		25	**188136**	**AEVC-20-25-A-P-A**	**188130**	**AEVC-20-25-I-P-A**		
	25	5	**188166**	**AEVC-25-5-A-P-A**	**188160**	**AEVC-25-5-I-P-A**	–	
		10	**188167**	**AEVC-25-10-A-P-A**	**188161**	**AEVC-25-10-I-P-A**		
		25	**188168**	**AEVC-25-25-A-P-A**	**188162**	**AEVC-25-25-I-P-A**		

Ordering data

Type	Piston ∅ [mm]	Stroke [mm]	Piston rod with male thread Part No.	Type	Piston rod with female thread Part No.	Type
	32	5	**188198**	**AEVC-32-5-A-P-A**	**188192**	**AEVC-32-5-I-P-A**
		10	**188199**	**AEVC-32-10-A-P-A**	**188193**	**AEVC-32-10-I-P-A**
		25	**188200**	**AEVC-32-25-A-P-A**	**188194**	**AEVC-32-25-I-P-A**
	40	10	**188228**	**AEVC-40-10-A-P-A**	**188224**	**AEVC-40-10-I-P-A**
		25	**188229**	**AEVC-40-25-A-P-A**	**188225**	**AEVC-40-25-I-P-A**
	50	10	**188256**	**AEVC-50-10-A-P-A**	**188252**	**AEVC-50-10-I-P-A**
		25	**188257**	**AEVC-50-25-A-P-A**	**188253**	**AEVC-50-25-I-P-A**
	63	10	**188280**	**AEVC-63-10-A-P-A**	**188276**	**AEVC-63-10-I-P-A**
		25	**188281**	**AEVC-63-25-A-P-A**	**188277**	**AEVC-63-25-I-P-A**
	80	10	**188304**	**AEVC-80-10-A-P-A**	**188300**	**AEVC-80-10-I-P-A**
		25	**188305**	**AEVC-80-25-A-P-A**	**188301**	**AEVC-80-25-I-P-A**
	100	10	**188328**	**AEVC-100-10-A-P-A**	**188324**	**AEVC-100-10-I-P-A**
		25	**188329**	**AEVC-100-25-A-P-A**	**188325**	**AEVC-100-25-I-P-A**

Adapter kit DPNC

Material:
Flange: Wrought aluminium alloy
Threaded studs, hex nuts: Galvanised steel
Free of copper and PTFE
RoHS-compliant

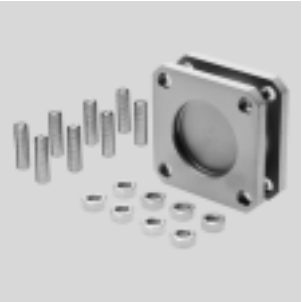

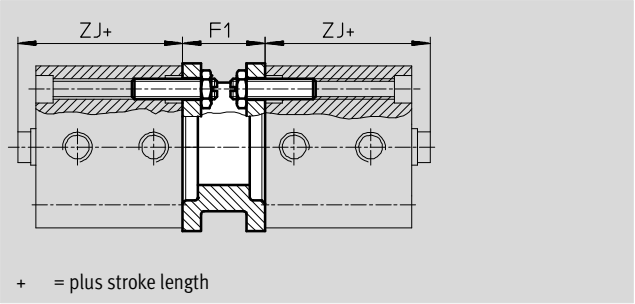

Dimensions and ordering data

For ∅ [mm]	Stroke [mm]	F1	ZJ without position sensing ADVC	ZJ without position sensing AEVC	ZJ with position sensing ADVC	ZJ with position sensing AEVC	Weight [g]	Part No.	Type
32	5	27	35	22	39	39	292	**174418**	**DPNC-32**
	10, 15, 20, 25			26					
40	5, 10	27	35.5	25.5	44	44	410	**174419**	**DPNC-40**
	15, 20, 25			30.5					
50	10	32	36	21.1	46	48	335	**174420**	**DPNC-50**
	15, 20, 25			28.5					
63	10	28	43	26	49	49	390	**174421**	**DPNC-63**
	15, 20, 25			33					
80	10, 15, 20, 25	38	48	43	57	57	847	**174422**	**DPNC-80**
100	10, 15, 20, 25	38	59	50	68	68	1200	**174423**	**DPNC-100**

Connecting two cylinders with identical piston ∅ as a 3 or 4-position cylinder

A 3 or 4-position cylinder consists of two separate cylinders whose piston rods advance in opposing directions. This means that depending upon actuation and stroke pattern, this type of cylinder can assume up to four positions. In each case the cylinder is driven precisely against a stop. Note that when one end of the piston rod is fixed, the cylinder barrel executes the movement. The cylinder must be connected with flexible line connections.

To achieve 3 positions

Two cylinders with identical stroke length must be connected together.

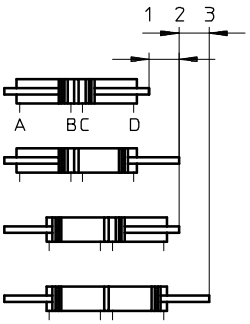

To achieve 4 positions

Two cylinders with different stroke lengths must be connected together.

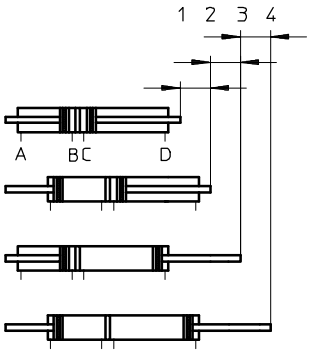

Foot mounting HNC

Material:
Galvanised steel
Free of copper and PTFE

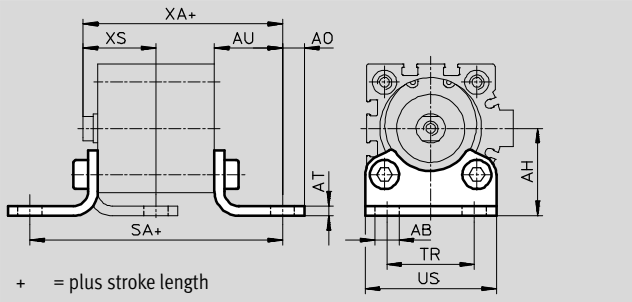

Dimensions and ordering data

For ∅ [mm]	Stroke [mm]	AB ∅	AH	AO	AT	AU	SA without position sensing ADVC	SA without position sensing AEVC	SA with position sensing ADVC	SA with position sensing AEVC	TR	US
32	5	7	32	6.5	4	24	77	69	81	81	32	45
	10, 15, 20, 25							73				
40	5, 10	10	36	9	4	28	85.5	80.5	94	94	36	54
	15, 20, 25							85.5				
50	10	10	45	9.5	5	32	92	84.6	102	104	45	64
	15, 20, 25							92				
63	10	10	50	12.5	5	32	99	89	105	105	50	75
	15, 20, 25							96				
80	10, 15, 20, 25	12	63	15	6	41	122	124	131	131	63	93
100	10, 15, 20, 25	14.5	71	17.5	6	41	131	131	140	140	75	110

For ∅ [mm]	Stroke [mm]	XA without position sensing ADVC	XA without position sensing AEVC	XA with position sensing ADVC	XA with position sensing AEVC	XS without position sensing ADVC	XS without position sensing AEVC	XS with position sensing ADVC	XS with position sensing AEVC	CRC[1]	Weight [g]	Part No.	Type
32	5	59	46	63	63	26	21	26	26	2	144	**174369**	**HNC-32**
	10, 15, 20, 25		50										
40	5, 10	63.5	53.5	72	72	30	25	30	30	2	193	**174370**	**HNC-40**
	15, 20, 25		58.5										
50	10	68	53.1	78	80	35	27.5	35	35	2	353	**174371**	**HNC-50**
	15, 20, 25		60.5										
63	10	75	58	81	81	35	28	35	35	2	436	**174372**	**HNC-63**
	15, 20, 25		65										
80	10, 15, 20, 25	89	84	98	98	43	36	43	43	2	829	**174373**	**HNC-80**
100	10, 15, 20, 25	100	91	109	109	45	36	45	45	2	1009	**174374**	**HNC-100**

1) Corrosion resistance class CRC 2 to Festo standard FN 940070
Moderate corrosion stress. Indoor applications in which condensation may occur. External visible parts with primarily decorative requirements for the surface and which are in direct contact with the ambient atmosphere typical for industrial applications.

Note

Screws with special lengths are required to fit the sizes ∅ 80 mm and ∅ 100 mm. ➔45

Flange mounting FNC

Material:
Galvanised steel
Free of copper and PTFE
RoHS-compliant

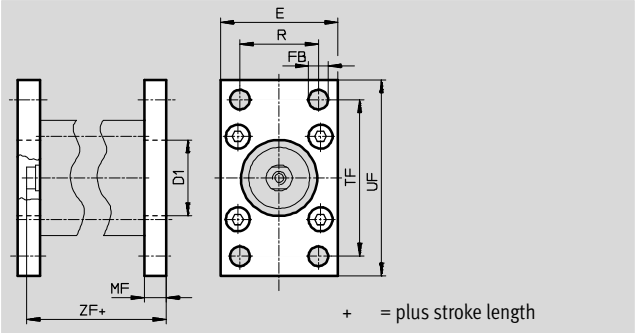

Dimensions and ordering data								
For ∅ [mm]	Stroke [mm]	D1 ∅ H11	E	FB ∅ H13	MF	R	TF	UF
32	5	30	45	7	10	32	64	80
	10, 15, 20, 25							
40	5, 10	35	54	9	10	36	72	90
	15, 20, 25							
50	10	40	65	9	12	45	90	110
	15, 20, 25							
63	10	45	75	9	12	50	100	120
	15, 20, 25							
80	10, 15, 20, 25	45	93	12	16	63	126	150
100	10, 15, 20, 25	55	110	14	16	75	150	175

For ∅	Stroke	ZF				CRC[1)]	Weight	Part No.	Type
		without position sensing		with position sensing					
[mm]	[mm]	ADVC	AEVC	ADVC	AEVC		[g]		
32	5	45	32	49	49	1	221	**174376**	**FNC-32**
	10, 15, 20, 25		36						
40	5, 10	45.5	35.5	54	54	1	291	**174377**	**FNC-40**
	15, 20, 25		40.5						
50	10	48	33.5	58	60	1	536	**174378**	**FNC-50**
	15, 20, 25		40.5						
63	10	55	38	61	61	1	679	**174379**	**FNC-63**
	15, 20, 25		45						
80	10, 15, 20, 25	64	59	73	73	1	1495	**174380**	**FNC-80**
100	10, 15, 20, 25	75	66	84	84	1	2041	**174381**	**FNC-100**

1) Corrosion resistance class CRC 1 to Festo standard FN 940070
Low corrosion stress. For dry indoor applications or transport and storage protection. Also applies to parts behind covers, in the non-visible interior area, and parts which are covered in the application (e.g. drive trunnions).

Note

Screws with special lengths are required to fit the sizes ∅ 80 mm and ∅ 100 mm. ➔45

Trunnion flange ZNCF

Material:
Special steel casting
Free of copper and PTFE
RoHS-compliant

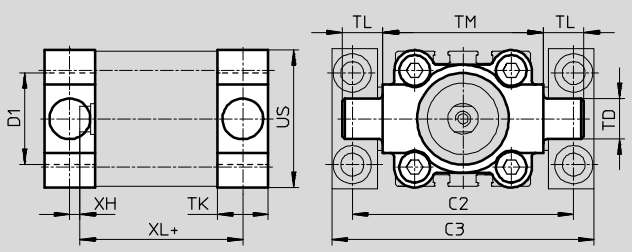

\+ = plus stroke length

Dimensions and ordering data

For ∅ [mm]	Stroke [mm]	C2	C3	D1 ∅ H11	TD ∅ e9	TK	TL	TM	US	XH
32	5	71	86	30	12	16	12	50	45	2
	10, 15, 20, 25									
40	5, 10	87	105	35	16	20	16	63	54	4
	15, 20, 25									
50	10	99	117	40	16	24	16	75	64	4
	15, 20, 25									
63	10	116	136	45	20	24	20	90	75	4
	15, 20, 25									
80	10, 15, 20, 25	136	156	45	20	28	20	110	93	6
100	10, 15, 20, 25	164	189	55	25	38	25	132	110	9

For ∅ [mm]	Stroke [mm]	XL without position sensing ADVC	XL without position sensing AEVC	XL with position sensing ADVC	XL with position sensing AEVC	CRC[1)]	Weight [g]	Part No.	Type
32	5	43	30	47	47	2	150	**174411**	**ZNCF-32**
	10, 15, 20, 25		34						
40	5, 10	45.5	35.5	54	54	2	285	**174412**	**ZNCF-40**
	15, 20, 25		40.5						
50	10	48	33.1	58	60	2	473	**174413**	**ZNCF-50**
	15, 20, 25		40.5						
63	10	55	38	61	61	2	687	**174414**	**ZNCF-63**
	15, 20, 25		45						
80	10, 15, 20, 25	62	57	71	71	2	1296	**174415**	**ZNCF-80**
100	10, 15, 20, 25	78	69	87	87	2	2254	**174416**	**ZNCF-100**

1) Corrosion resistance class CRC 2 to Festo standard FN 940070
Moderate corrosion stress. Indoor applications in which condensation may occur. External visible parts with primarily decorative requirements for the surface and which are in direct contact with the ambient atmosphere typical for industrial applications.

Note

Screws with special lengths are required to fit the sizes ∅ 80 mm and ∅ 100 mm. ➔45

Trunnion support LNZG

Material:
Trunnion support:
Anodised aluminium
Plain bearing: Plastic
Free of copper and PTFE
RoHS-compliant

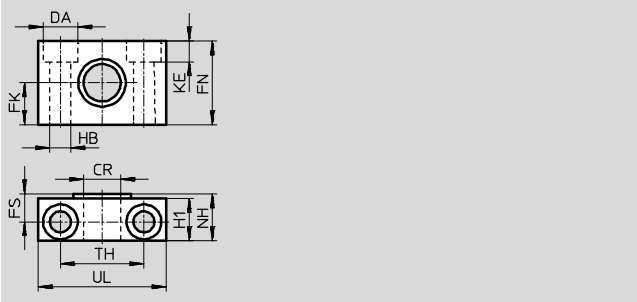

Dimensions and ordering data

For ∅ [mm]	CR ∅ D11	DA ∅ H13	FK ∅ ±0.1	FN	FS	H1	HB ∅ H13	KE	NH	TH ±0.2	UL	CRC[1)]	Weight [g]	Part No.	Type
32	12	11	15	30	10.5	15	6.6	6.8	18	32	46	2	83	**32959**	**LNZG-32**
40, 50	16	15	18	36	12	18	9	9	21	36	55	2	129	**32960**	**LNZG-40/50**
63, 80	20	18	20	40	13	20	11	11	23	42	65	2	178	**32961**	**LNZG-63/80**
100	25	20	25	50	16	24.5	14	13	28.5	50	75	2	306	**32962**	**LNZG-100/125**

1) Corrosion resistance class CRC 2 to Festo standard FN 940070
Moderate corrosion stress. Indoor applications in which condensation may occur. External visible parts with primarily decorative requirements for the surface and which are in direct contact with the ambient atmosphere typical for industrial applications.

Swivel flange SNC

Material:
Die-cast aluminium
Free of copper and PTFE
RoHS-compliant

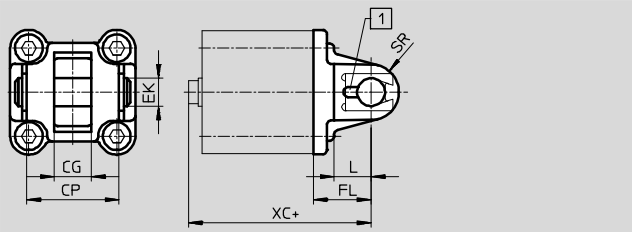

\+ = plus stroke length
1 The pivot pin is secured against rotation with a dowel pin

Dimensions and ordering data

For ∅ [mm]	Stroke [mm]	CG H14	CP h14	EK ∅ h9	FL ±0.2	L	SR
32	5	14	34	10	22	13	10
	10, 15, 20, 25						
40	5, 10	16	40	12	25	16	12
	15, 20, 25						
50	10	21	45	16	27	16	12
	15, 20, 25						
63	10	21	51	16	32	21	16
	15, 20, 25						
80	10, 15, 20, 25	25	65	20	36	22	16
100	10, 15, 20, 25	25	75	20	41	27	20

For ∅ [mm]	Stroke [mm]	XC without position sensing ADVC	XC without position sensing AEVC	XC with position sensing ADVC	XC with position sensing AEVC	CRC[1]	Weight [g]	Part No.	Type
32	5	57	44	61	61	2	93	**174383**	**SNC-32**
	10, 15, 20, 25		48						
40	5, 10	60.5	50.5	69	69	2	140	**174384**	**SNC-40**
	15, 20, 25		55.5						
50	10	63	48.1	73	75	2	234	**174385**	**SNC-50**
	15, 20, 25		55.5						
63	10	75	58	81	81	2	331	**174386**	**SNC-63**
	15, 20, 25		65						
80	10, 15, 20, 25	84	79	93	93	2	618	**174387**	**SNC-80**
100	10, 15, 20, 25	100	91	109	109	2	865	**174388**	**SNC-100**

1) Corrosion resistance class CRC 2 to Festo standard FN 940070
Moderate corrosion stress. Indoor applications in which condensation may occur. External visible parts with primarily decorative requirements for the surface and which are in direct contact with the ambient atmosphere typical for industrial applications.

Note

Screws with special lengths are required to fit the sizes ∅ 80 mm and ∅ 100 mm. ➔45

Swivel flange SNCB

Material:
Die-cast aluminium
Free of copper and PTFE
RoHS-compliant

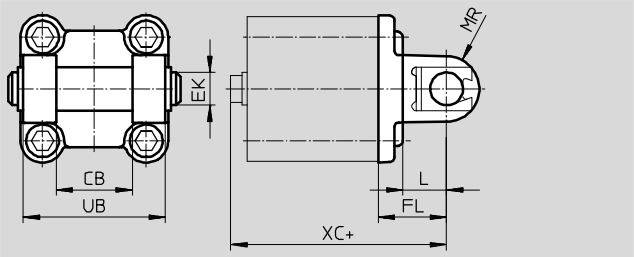

+ = plus stroke length

Dimensions and ordering data								
For ∅ [mm]	Stroke [mm]	CB H14	EK ∅ e8	FL ±0.2	L	ML	MR	UB h14
32	5	26	10	22	13	55	8.5	45
	10, 15, 20, 25							
40	5, 10	28	12	25	16	63	12	52
	15, 20, 25							
50	10	32	12	27	16	71	12	60
	15, 20, 25							
63	10	40	16	32	21	83	16	70
	15, 20, 25							
80	10, 15, 20, 25	50	16	36	22	103	16	90
100	10, 15, 20, 25	60	20	41	27	127	20	110

For ∅	Stroke	XC				CRC[1)]	Weight	Part No.	Type
		without position sensing		with position sensing					
[mm]	[mm]	ADVC	AEVC	ADVC	AEVC		[g]		
32	5	57	44	61	61	2	103	**174390**	**SNCB-32**
	10, 15, 20, 25		48						
40	5, 10	60.5	50.5	69	69	2	155	**174391**	**SNCB-40**
	15, 20, 25		55.5						
50	10	63	48.1	73	75	2	232	**174392**	**SNCB-50**
	15, 20, 25		55.5						
63	10	75	58	81	81	2	375	**174393**	**SNCB-63**
	15, 20, 25		65						
80	10, 15, 20, 25	84	79	93	93	2	636	**174394**	**SNCB-80**
100	10, 15, 20, 25	100	91	109	109	2	1035	**174395**	**SNCB-100**

1) Corrosion resistance class CRC 2 to Festo standard FN 940070
Moderate corrosion stress. Indoor applications in which condensation may occur. External visible parts with primarily decorative requirements for the surface and which are in direct contact with the ambient atmosphere typical for industrial applications.

Note

Screws with special lengths are required to fit the sizes ∅ 80 mm and ∅ 100 mm. ➔45

Swivel flange SNCS

Material:
SNCS 32 … 80:
Die-cast aluminium
SNCS 100:
Wrought aluminium alloy
Free of copper and PTFE
RoHS-compliant

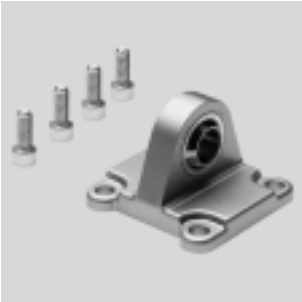

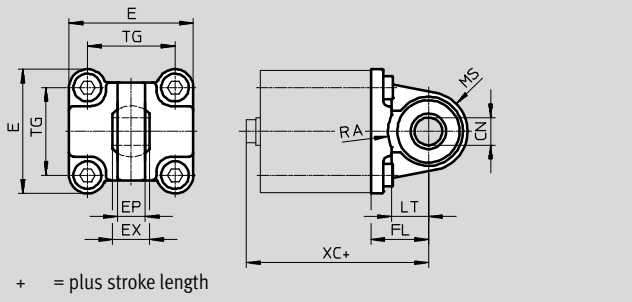

Dimensions and ordering data

For ∅ [mm]	Stroke [mm]	CN ∅	E	EP ±0.2	EX	FL ±0.2	LT	MS	RA +1	TG
32	5	$10^{+0.013}$	$45^{+0.2/-0.5}$	10.5	14	22	13	$15^{+0.5}$	14.5	32.5
	10, 15, 20, 25									
40	5, 10	$12^{+0.015}$	$54_{-0.5}$	12	16	25	16	$17^{+0.5}$	17.5	38
	15, 20, 25									
50	10	$16^{+0.015}$	$64_{-0.6}$	15	21	27	16	$20^{+0.5}$	18.5	46.5
	15, 20, 25									
63	10	$16^{+0.015}$	$75_{-0.6}$	15	21	32	21	$23_{-0.5}$	23	56.5
	15, 20, 25									
80	10, 15, 20, 25	$20^{+0.018}$	$93_{-0.8}$	18	25	36	22	$28_{-0.5}$	25	72
100	10, 15, 20, 25	$20^{+0.018}$	$109^{+1/-0.7}$	18	25	41	27	$30^{\pm 0.5}$	95	89

For ∅ [mm]	Stroke [mm]	XC without position sensing ADVC	XC without position sensing AEVC	XC with position sensing ADVC	XC with position sensing AEVC	CRC[1)]	Weight [g]	Part No.	Type
32	5	57	44	61	61	2	86	**174397**	**SNCS-32**
	10, 15, 20, 25		48						
40	5, 10	60.5	50.5	69	69	2	122	**174398**	**SNCS-40**
	15, 20, 25		55.5						
50	10	63	48.1	73	75	2	216	**174399**	**SNCS-50**
	15, 20, 25		55.5						
63	10	75	58	81	81	2	281	**174400**	**SNCS-63**
	15, 20, 25		65						
80	10, 15, 20, 25	84	79	93	93	2	557	**174401**	**SNCS-80**
100	10, 15, 20, 25	100	91	109	109	2	683	**174402**	**SNCS-100**

1) Corrosion resistance class CRC 2 to Festo standard FN 940070
Moderate corrosion stress. Indoor applications in which condensation may occur. External visible parts with primarily decorative requirements for the surface and which are in direct contact with the ambient atmosphere typical for industrial applications.

Note

Screws with special lengths are required to fit the sizes ∅ 80 mm and ∅ 100 mm. ➔45

Swivel flange SNCL

Material:
Die-cast aluminium
Free of copper and PTFE
RoHS-compliant

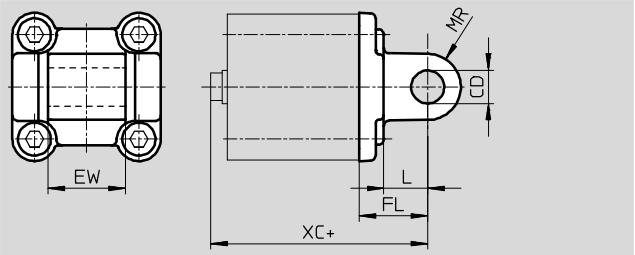

+ = plus stroke length

Dimensions and ordering data						
For ∅ [mm]	Stroke [mm]	CD ∅ H9	EW −0.2/−0.6	FL ±0.2	L	MR
32	5	10	26	22	13	10
	10, 15, 20, 25					
40	5, 10	12	28	25	16	12
	15, 20, 25					
50	10	12	32	27	16	12
	15, 20, 25					
63	10	16	40	32	21	16
	15, 20, 25					
80	10, 15, 20, 25	16	50	36	22	16
100	10, 15, 20, 25	20	60	41	27	20

For ∅	Stroke	XC				CRC[1)]	Weight	Part No.	Type
		without position sensing		with position sensing					
[mm]	[mm]	ADVC	AEVC	ADVC	AEVC		[g]		
32	5	57	44	61	61	2	71	**174404**	**SNCL-32**
	10, 15, 20, 25		48						
40	5, 10	60.5	50.5	69	69	2	95	**174405**	**SNCL-40**
	15, 20, 25		55.5						
50	10	63	48.1	73	75	2	158	**174406**	**SNCL-50**
	15, 20, 25		55.5						
63	10	75	58	81	81	2	225	**174407**	**SNCL-63**
	15, 20, 25		65						
80	10, 15, 20, 25	84	79	93	93	2	436	**174408**	**SNCL-80**
100	10, 15, 20, 25	100	91	109	109	2	655	**174409**	**SNCL-100**

1) Corrosion resistance class CRC 2 to Festo standard FN 940070
Moderate corrosion stress. Indoor applications in which condensation may occur. External visible parts with primarily decorative requirements for the surface and which are in direct contact with the ambient atmosphere typical for industrial applications.

Note

Screws with special lengths are required to fit the sizes ∅ 80 mm and ∅ 100 mm. ➔45

Ordering data – Mounting attachments

Technical data ➔ Internet: clevis foot

Designation	For ∅	Part No.	Type
Clevis foot mounting LNG			
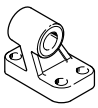	32	**33890**	**LNG-32**
	40	**33891**	**LNG-40**
	50	**33892**	**LNG-50**
	63	**33893**	**LNG-63**
	80	**33894**	**LNG-80**
	100	**33895**	**LNG-100**
Clevis foot mounting LSNG			
	32	**31740**	**LSNG-32**
	40	**31741**	**LSNG-40**
	50	**31742**	**LSNG-50**
	63	**31743**	**LSNG-63**
	80	**31744**	**LSNG-80**
	100	**31745**	**LSNG-100**
Clevis foot LBG on swivel flange SNCS			
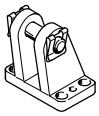	32	**31761**	**LBG-32**
	40	**31762**	**LBG-40**
	50	**31763**	**LBG-50**
	63	**31764**	**LBG-63**
	80	**31765**	**LBG-80**
	100	**31766**	**LBG-100**
Clevis foot, right-angled LQG			
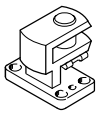	32, 40	**31768**	**LQG-32**
	50, 63	**31769**	**LQG-40**
	80	**31770**	**LQG-50**
		31771	**LQG-63**
	100	**31772**	**LQG-80**
		31773	**LQG-100**

Designation	For ∅	Part No.	Type
Clevis foot mounting LSN			
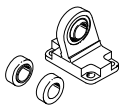	32	**5561**	**LSN-32**
	40	**5562**	**LSN-40**
	50	**5563**	**LSN-50**
	63	**5564**	**LSN-63**
	80	**5565**	**LSN-80**
	100	**5566**	**LSN-100**
Weld-on clevis foot mounting LSNSG			
	32	**31747**	**LSNSG-32**
	40	**31748**	**LSNSG-40**
	50	**31749**	**LSNSG-50**
	63	**31750**	**LSNSG-63**
	80	**31751**	**LSNSG-80**
	100	**31752**	**LSNSG-100**
Clevis foot LBG on rod eye SGS			
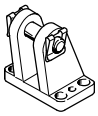	32, 40	**31761**	**LBG-32**
	50, 63	**31762**	**LBG-40**
	80	**31763**	**LBG-50**
		31764	**LBG-63**
	100	**31765**	**LBG-80**
		31766	**LBG-100**

Ordering data

Special screw	For ∅	For accessory	Part No.		PU[1)]
	80, 100	HNC, FNC, SNC, SNCS, SNCL, SNCB	**238600**	**M10x30**	**1**
	80	ZNCF	**204138**	**M10x40**	
	100	ZNCF	**370524**	**M10x50**	

1) Packaging unit quantity

Ordering data – Piston rod attachments

Technical data ➔ Internet: piston-rod attachment

Designation	For ∅	Part No.	Type
Rod eye SGS			
	10	**9253**	**SGS-M4**
	16	**9254**	**SGS-M6**
	20	**9255**	**SGS-M8**
	25		
	32	**9261**	**SGS-M10x1,25**
	40		
	50	**9262**	**SGS-M12x1,25**
	63		
	80	**9263**	**SGS-M16x1,5**
	100	**9264**	**SGS-M20x1,5**
Rod clevis SG			
	10	**6532**	**SG-M4**
	12	**–**	**–**
	16	**3110**	**SG-M6**
	20	**3111**	**SG-M8**
	25		
	32	**6144**	**SG-M10x1,25**
	40		
	50	**6145**	**SG-M12x1,25**
	63		
	80	**6146**	**SG-M16x1,5**
	100	**6147**	**SG-M20x1,5**
Coupling piece KSG			
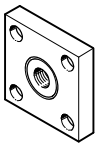	32	**32963**	**KSG-M10x1,25**
	40		
	50	**32964**	**KSG-M12x1,25**
	63		
	80	**32965**	**KSG-M16x1,5**
	100	**32966**	**KSG-M20x1,5**

Designation	For ∅	Part No.	Type
Rod clevis SGA			
	32	**–**	**–**
	40		
	50		
	63		
	32	**32954**	**SGA-M10x1.25**
	40		
	50	**10767**	**SGA-M12x1,25**
	63		
	80	**10768**	**SGA-M16x1,5**
	100	**10769**	**SGA-M20x1,5**
Self-aligning rod coupler FK			
	10	**6528**	**FK-M4**
	12	**30984**	**FK-M5**
	16	**2061**	**FK-M6**
	20	**2062**	**FK-M8**
	25		
	32	**6140**	**FK-M10x1,25**
	40		
	50	**6141**	**FK-M12x1,25**
	63		
	80	**6142**	**FK-M16x1,5**
	100	**6143**	**FK-M20x1,5**

Ordering data – Proximity sensors for T-slot, magneto-resistive Technical data ➔ Internet: smt

	Type of mounting	Switch output	Electrical connection	Cable length [m]	Part No.	Type
N/O contact						
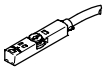	Insertable in the slot from above, flush with cylinder profile, short design	PNP	Cable, 3-wire	2.5	**574335**	**SMT-8M-A-PS-24V-E-2,5-OE**
			Plug M8x1, 3-pin	0.3	**574334**	**SMT-8M-A-PS-24V-E-0,3-M8D**
			Plug M12x1, 3-pin	0.3	**574337**	**SMT-8M-A-PS-24V-E-0,3-M12**
		NPN	Cable, 3-wire	2.5	**574338**	**SMT-8M-A-NS-24V-E-2,5-OE**
			Plug M8x1, 3-pin	0.3	**574339**	**SMT-8M-A-NS-24V-E-0,3-M8D**
N/C contact						
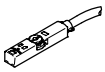	Insertable in the slot from above, flush with cylinder profile, short design	PNP	Cable, 3-wire	7.5	**574340**	**SMT-8M-A-PO-24V-E-7,5-OE**

Ordering data – Proximity sensors for T-slot, magnetic reed Technical data ➔ Internet: sme

	Type of mounting	Switch output	Electrical connection	Cable length [m]	Part No.	Type
N/O contact						
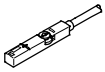	Insertable in the slot from above, flush with cylinder profile	Contacting	Cable, 3-wire	2.5	**543862**	**SME-8M-DS-24V-K-2,5-OE**
				5.0	**543863**	**SME-8M-DS-24V-K-5,0-OE**
			Cable, 2-wire	2.5	**543872**	**SME-8M-ZS-24V-K-2,5-OE**
			Plug M8x1, 3-pin	0.3	**543861**	**SME-8M-DS-24V-K-0,3-M8D**
	Insertable in the slot lengthwise, flush with the cylinder profile	Contacting	Cable, 3-wire	2.5	**150855**	**SME-8-K-LED-24**
			Plug M8x1, 3-pin	0.3	**150857**	**SME-8-S-LED-24**
N/C contact						
	Insertable in the slot lengthwise, flush with the cylinder profile	Contacting	Cable, 3-wire	7.5	**160251**	**SME-8-O-K-LED-24**

Ordering data – Connecting cables Technical data ➔ Internet: nebu

	Electrical connection, left	Electrical connection, right	Cable length [m]	Part No.	Type
	Straight socket, M8x1, 3-pin	Cable, open end, 3-wire	2.5	**541333**	**NEBU-M8G3-K-2.5-LE3**
			5	**541334**	**NEBU-M8G3-K-5-LE3**
	Straight socket, M12x1, 5-pin	Cable, open end, 3-wire	2.5	**541363**	**NEBU-M12G5-K-2.5-LE3**
			5	**541364**	**NEBU-M12G5-K-5-LE3**
	Angled socket, M8x1, 3-pin	Cable, open end, 3-wire	2.5	**541338**	**NEBU-M8W3-K-2.5-LE3**
			5	**541341**	**NEBU-M8W3-K-5-LE3**
	Angled socket, M12x1, 5-pin	Cable, open end, 3-wire	2.5	**541367**	**NEBU-M12W5-K-2.5-LE3**
			5	**541370**	**NEBU-M12W5-K-5-LE3**

Ordering data – Slot cover for T-slot

	Mounting	Length	Part No.	Type
	Insertable from above	2x 0.5 m	**151680**	**ABP-5-S**

Ordering data – Proximity switches for C-slot, magneto-resistive Technical data ➔ Internet: smt

	Type of mounting	Switch output	Electrical connection, connection direction	Cable length [m]	Part No.	Type
N/O contact						
	Insertable in the slot from above	PNP	Plug M8x1, 3-pin, in-line	0,3	**551375**	**SMT-10M-PS-24V-E-0,3-L-M8D**
			Cable, 3-wire, in-line	2,5	**551373**	**SMT-10M-PS-24V-E-2,5-L-OE**

Ordering data – Proximity switches for C-slot, magnetic reed Technical data ➔ Internet: sme

	Type of mounting	Switch output	Electrical connection, connection direction	Cable length [m]	Part No.	Type
N/O contact						
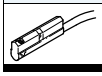	Insertable in the slot lengthwise	Contacting	Plug M8x1, 3-pin, in-line	0,3	**173212**	**SME-10-SL-LED-24**
			Cable, 3-wire, in-line	2,5	**173210**	**SME-10-KL-LED-24**

Ordering data – Connecting cables Technical data ➔ Internet: nebu

	Electrical connection, left	Electrical connection, right	Cable length [m]	Part No.	Type
	Straight socket, M8x1, 3-pin	Cable, open end, 3-wire	2,5	**541333**	**NEBU-M8G3-K-2.5-LE3**
			5	**541334**	**NEBU-M8G3-K-5-LE3**
	Angled socket, M8x1, 3-pin	Cable, open end, 3-wire	2,5	**541338**	**NEBU-M8W3-K-2.5-LE3**
			5	**541341**	**NEBU-M8W3-K-5-LE3**

Ordering data – One-way flow control valves Technical data ➔ Internet: grl

	Connection		Material	Part No.	Type
	Thread	For tubing O.D.			
For exhaust air					
	M3	3	Metal design	**175041**	**GRLA-M3-QS-3**
	M5	3		**193137**	**GRLA-M5-QS-3-D**
		4		**193138**	**GRLA-M5-QS-4-D**
		6		**193139**	**GRLA-M5-QS-6-D**
	G⅛	3		**193142**	**GRLA-⅛-QS-3-D**
		4		**193143**	**GRLA-⅛-QS-4-D**
		6		**193144**	**GRLA-⅛-QS-6-D**
		8		**193145**	**GRLA-⅛-QS-8-D**
	G¼	6		**193146**	**GRLA-¼-QS-6-D**
		8		**193147**	**GRLA-¼-QS-8-D**
		10		**193148**	**GRLA-¼-QS-10-D**
For supply air					
	M3	3	Metal design	**175043**	**GRLZ-M3-QS-3**
	M5	3		**193153**	**GRLZ-M5-QS-3-D**
		4		**193154**	**GRLZ-M5-QS-4-D**
		6		**193155**	**GRLZ-M5-QS-6-D**
	G⅛	3		**193156**	**GRLZ-⅛-QS-3-D**
		4		**193157**	**GRLZ-⅛-QS-4-D**
		6		**193158**	**GRLZ-⅛-QS-6-D**
		8		**193159**	**GRLZ-⅛-QS-8-D**