# Connecting cables, universal

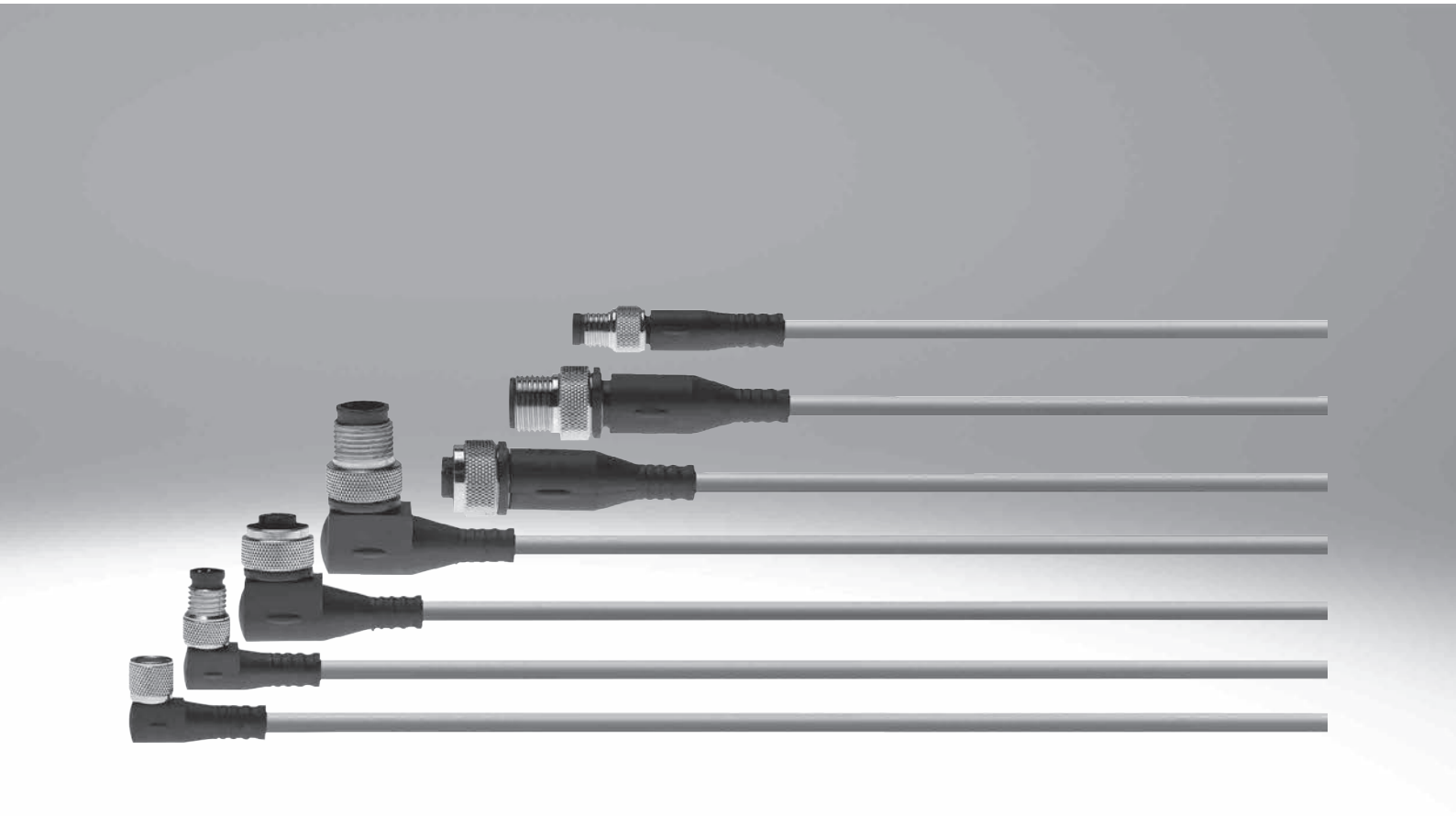

| | |
|---|---|
| ★/☆ | Festo core product range<br>Covers 80% of your automation tasks |
| Worldwide: | Always in stock |
| Superb: | Festo quality at an attractive price |
| Easy: | Simplified procurement and warehousing |

★ Generally ready for dispatch from the factory within 24 hours
In stock at 13 Service Centres worldwide
More than 2200 products

☆ Generally ready for dispatch from the factory within 5 days
Assembled for you at 4 Service Centres worldwide
Up to 6 × $10^{12}$ variants per product family

Just look for the star!

# Characteristics

## Cable characteristic

The connecting cables NEBU can be configured and ordered using a modular system. A range of characteristics can therefore be defined.

These include, for example:
- Electrical connection
- Cable characteristic
- Length
- Number of pins/wires

The cable characteristic indicates the resistance of the connecting cable to the mechanical load.

There are three qualities:
- Standard
- Suitable for energy chains
- Suitable for robot applications

### Cable characteristic: standard — Code K

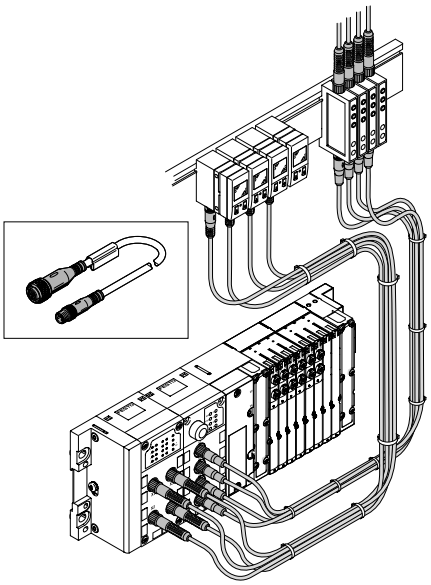

Standard applications are characterised by fixed cable installation or small to medium mechanical loads.
The connecting cable can even be used for simple applications with energy chains with larger radii.
The cable sheath of the connecting cables is made of polyurethane, is free of halogen, oil resistant and optimised for installation in contact with pneumatic tubing; free of phosphoric acid ester.

- The connecting cable is tested for resistance to bending according to the Festo standard; test conditions are available on request.
- The connecting cable has been tested on an energy chain over 5 million cycles and at a bending radius of 75 mm.

### Cable characteristic: suitable for energy chains — Code E

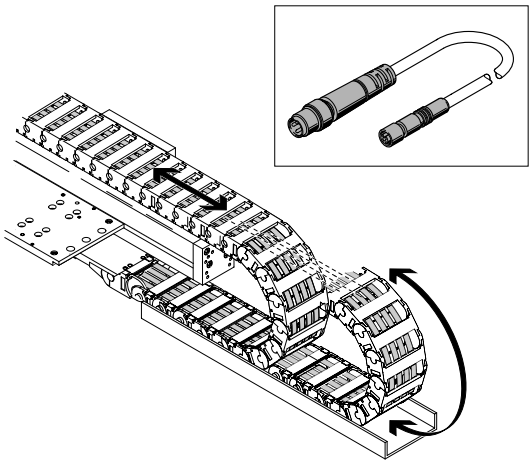

Energy chain applications involve high mechanical loads, particularly if very small radii are required.
The connecting cable can be used in a setting where it is constantly subjected to bending.
The cable sheath of the connecting cables is made of polyurethane, is free of halogen, oil resistant and optimised for installation in contact with pneumatic tubing; free of phosphoric acid ester.

- The connecting cable is tested for resistance to bending according to the Festo standard; test conditions are available on request.
- The connecting cable has been tested on an energy chain over 5 million cycles and at a bending radius of 75 mm.
- The connecting cable has been tested on an energy chain over 5 million cycles and at a bending radius of 28 mm.

# Characteristics

## Cable characteristic

| Cable characteristic: suitable for robot applications | Code R |
|---|---|

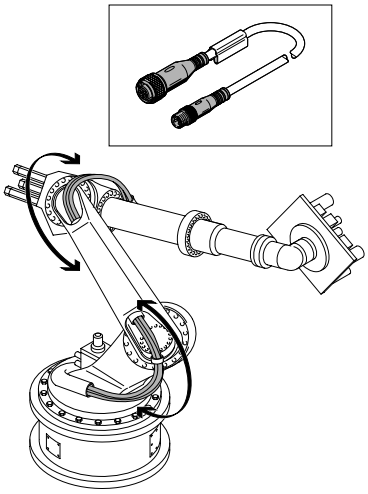

Robot applications involve high mechanical loads that are primarily caused by torsion (twisting).
The cable sheath of the connecting cables is made of polyurethane, is free of halogen, oil resistant and optimised for installation in contact with pneumatic tubing; free of phosphoric acid ester.

- The connecting cable is tested for resistance to bending according to the Festo standard; test conditions are available on request.
- The connecting cable has been tested on an energy chain over 5 million cycles and at a bending radius of 75 mm.
- The connecting cable has been tested on an energy chain over 5 million cycles and at a bending radius of 28 mm.
- The connecting cable has been tested for torsional resistance over more than 0.3 million cycles at ±270°/0.1 m.

## Connection technology version

The type of plug for the connecting cable can be selected (e.g. angled or straight).

The rotatable version is a special type: with an angled socket, the cable outlet can be rotated 360° in increments of 15°.

Benefit:
The cable outlet can be rotated to the optimum position in tight installation conditions.
The rotatable plug is not designed to be constantly adjusted.

## Mounting

Observe the orientation of the pins.

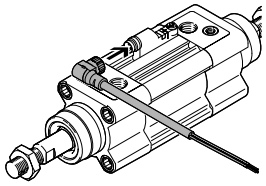

Connect the plug to the socket.

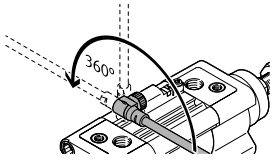


Adjust the cable outlet.

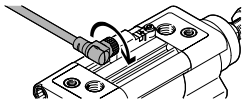

Tighten the union nut.

# Product range overview

| Function | Version | Type | Connection technology (on the right) | Cable characteristic | Length | ➔ Page/ Internet |
|---|---|---|---|---|---|---|
| **Electrical connecting cable** | **Electrical connection (on the left), open cable end** | | | | | |
| | 5-pin | NEBU-LE | Plug | Standard, suitable for energy chains, suitable for robot applications | 0.1 … 30 m | 6 |
| | **Electrical connection (on the left), socket M8** | | | | | |
| | 3-pin | NEBU-M8<br>SIM-M8 | Plug, open cable end | Standard, suitable for energy chains, suitable for robot applications | 0.1 … 30 m | 11 |
| | 4-pin | NEBU-M8<br>SIM-M8 | Plug, open cable end | Standard, suitable for energy chains, suitable for robot applications | 0.1 … 30 m | 18 |
| | **Electrical connection (on the left), socket M12** | | | | | |
| | 4-pin | SIM-M12-RS-3 | Open cable end | Resistant to welding spatter | 3 m | 24 |
| | 5-pin | NEBU-M12G5<br>NEBU-M12W5<br>SIM-M12 | Plug, open cable end | Standard, suitable for energy chains, suitable for robot applications | 0.1 … 30 m | 27 |
| | 8-pin | NEBU-M12-W8<br>SIM-M12-8<br>KM12-8 | Plug, open cable end | Standard | 2 m, 5 m, 10 m, 15 m, 20 m, 25 m | 35 |
| | **Electrical connection (on the left), socket G7/8** | | | | | |
| | 5-pin | NEBU-G78 | Open cable end | Standard | 2 m | 40 |
| | **Electrical connection (on the left), clip** | | | | | |
| | 3-pin | SIM-K | Open cable end | Standard | 2.5 m, 5 m, 10 m | 42 |
| | 4-pin | SIM-K-4 | Open cable end | Standard | 2.5 m, 5 m | 45 |

# Type codes

| 001 | Series | |
|---|---|---|
| **NEBU** | Connecting cable, universal | |

| 002 | Connection technology left, field device side | |
|---|---|---|
| **M8** | Socket M8x1 A-coded, EN 61076-2-104 | |
| **M12** | Socket M12x1 A-coded, EN 61076-2-101 | |
| **G78** | 7/8” | |
| **LE** | Open end | |

| 003 | Cable outlet left | |
|---|---|---|
| | None | |
| **G** | Straight | |
| **R** | Rotating | |
| **W** | Angled | |

| 004 | Number of pins/wires on the left | |
|---|---|---|
| **3** | 3 | |
| **4** | 4 | |
| **5** | 5 | |
| **8** | 8 | |

| 005 | Display | |
|---|---|---|
| | None | |
| **L** | LED signal status, DC | |
| **N** | LED switching state, NPN | |
| **P** | LED switching state, PNP | |
| **P2** | 2x LED, PNP | |

| 006 | Cable characteristic | |
|---|---|---|
| **P** | Basic | |
| **K** | Standard | |
| **E** | Suitable for energy chains | |
| **R** | Suitable for robot applications | |

| 007 | Cable length [m] | |
|---|---|---|
| **0.1** | 0.1 | |
| **0.5** | 0.5 | |
| **1** | 1 | |
| **1.5** | 1.5 | |
| **2** | 2 | |
| **2.5** | 2.5 | |
| **3** | 3 | |
| **3.5** | 3.5 | |
| **5** | 5 | |
| **7** | 7 | |
| **7.5** | 7.5 | |
| **9** | 9 | |
| **10** | 10 | |
| **15** | 15 | |
| **30** | 30 | |

| 008 | Cable identification | |
|---|---|---|
| | With label holder | |
| **N** | Without label holder | |

| 009 | Wire cross section [mm²] | |
|---|---|---|
| | Standard | |
| **Q8** | 1 | |

| 010 | Connection technology right, controller side | |
|---|---|---|
| **M8** | Plug M8x1 A-coded, EN 61076-2-104 | |
| **M12** | Plug M12x1 A-coded, EN 61076-2-101 | |
| **LE** | Open end | |

| 011 | Plug | |
|---|---|---|
| | None | |
| **G** | Straight | |
| **W** | Angled | |

| 012 | Number of pins/wires on the right | |
|---|---|---|
| **2** | 2 | |
| **3** | 3 | |
| **4** | 4 | |
| **5** | 5 | |
| **8** | 8 | |

# Data sheet

**Connecting cable**
**NEBU-LE**

- Connecting cable for connecting inputs/outputs
- Pre-assembled at one end
- Cable lengths 0.1 … 30 m
- 3, 4, 5 wires
- Plug M8 or M12

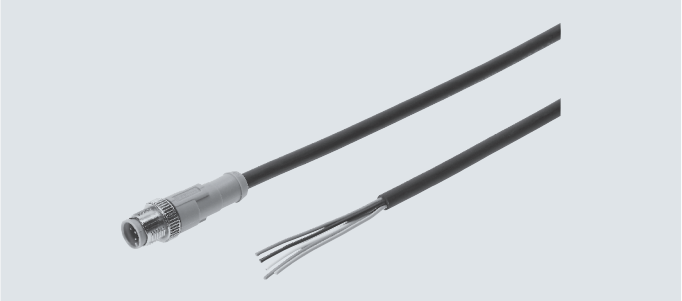

| General technical data | | | |
|---|---|---|---|
| Conforms to standard | EN 61076-2-104 | | |
| | EN 61076-2-101 | | |
| | Wire colours and connection numbers to EN 60947-5-2 | | |
| Cable designation | With 2x inscription label holders | | |
| Degree of protection to EN 60529 | IP65, IP68, IP69K | | |
| Note on degree of protection | In assembled state | | |

| Technical data – Electrical connection 1 | | | |
|---|---|---|---|
| Function | Field device side | | |
| Connection type | Cable | | |
| Connection technology | Open end | | |
| Number of pins/wires | 3 | 4 | 5 |
| Assigned pins/wires | 3 | 4 | 5 |

| Technical data – Electrical components | | | | | | |
|---|---|---|---|---|---|---|
| Electrical connection 2 | | Plug M8x1 | | Plug M12x1 | | |
| | | 3-pin | 4-pin | 3-pin | 4-pin | 5-pin |
| Operating voltage range | [V DC] | 0 … 60 | 0 … 30 | 0 … 250 | 0 … 250 | 0 … 60 |
| | [V AC] | 0 … 60 | 0 … 30 | 0 … 250 | 0 … 250 | 0 … 60 |
| Surge resistance | [kV] | 1.5 | 0.8 | 2.5 | 2.5 | 1.5 |
| Current rating | [A] | 3 | 3 | 4 | 4 | 4 |

| Technical data – Cable | | | | | |
|---|---|---|---|---|---|
| Cable characteristic | Code -K- | Standard | | | |
| | Code -E- | Suitable for energy chains | | | |
| | Code -R- | Suitable for robot applications | | | |
| Cable testing conditions | | Bending strength: to Festo standard | | | |
| | | Test conditions on request | | | |
| | Cable characteristic: Standard | Energy chain: 5 million cycles, bending radius 75 mm | | | |
| | Cable characteristic: Suitable for energy chains | Energy chain: 5 million cycles, bending radius 28 mm | | | |
| | Cable characteristic: Suitable for robot applications | Energy chain: 5 million cycles, bending radius 28 mm | | | |
| | | Torsional resistance more than 300000 cycles, ±270°/0.1 m | | | |
| Cable diameter | [mm] | 4.5 | | | |
| Cable diameter tolerance | [mm] | ±0.1 | | | |
| Cable composition | [mm²] | 3x 0.25 | 4x 0.25 | 5x 0.25 | |
| Conductor nominal cross section | [mm²] | 0.25 | | | |

# Data sheet

| Technical data – Electrical connection 2 | | | | | |
|---|---|---|---|---|---|
| Function | Controller side | | | | |
| Design | Round | | | | |
| Connection type | Plug | | | | |
| Cable outlet | Straight | | | | |
| Connection technology | M8x1, A-coded to EN 61076-2-104 | | M12x1, A-coded to EN 61076-2-101 | | |
| Number of pins/wires | 3 | 4 | 3 | 4 | 5 |
| Assigned pins/wires | 3 | 4 | 3 | 4 | 5 |
| Type of mounting | Screw-type lock | | | | |

| Materials | |
|---|---|
| Housing | TPE-U(PUR) |
| Housing colour | Black |
| Cable sheath | TPE-U(PUR) |
| Cable sheath colour | Grey |
| Insulating sheath | PP |
| Screw-type lock | Nickel-plated brass |
| Note on materials | RoHS-compliant |
| | Free of copper and PTFE |
| | Halogen-free |
| | Free of phosphoric acid ester |
| Special characteristics | Oil resistant |

| Operating and environmental conditions | | |
|---|---|---|
| Ambient temperature | [°C] | –25 ... +70 |
| Ambient temperature with flexible cable installation | [°C] | –5 ... +70 |
| Corrosion resistance CRC[1)] | | 2 |
| CE marking (see declaration of conformity)[2)] | | To EU Low-Voltage Directive |
| Pollution degree | | 3 |

1) Corrosion resistance class CRC 2 to Festo standard FN 940070
Moderate corrosion stress. Indoor applications in which condensation can occur. External visible parts with primarily decorative surface requirements which are in direct contact with a normal industrial environment.

2) Additional information www.festo.com/sp → Certificates.

# Data sheet

**Circuitry (socket view)**

| Electrical connection 1 | Pin | Wire colour[1] | Pin | Electrical connection 2 | |
|---|---|---|---|---|---|
| **Electrical connection, open cable end, 3-wire – plug, 3-pin** | | | | **Plug M8** | **Plug M12** |
| – | 1 | BN | 1 | 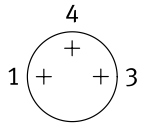 | 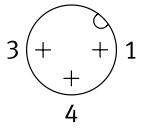 |
| | 2 | WH | – | | |
| | 3 | BU | 3 | | |
| | 4 | BK | 4 | | |
| **Electrical connection, open cable end, 4-wire – plug, 4-pin** | | | | **Plug M8** | **Plug M12** |
| – | 1 | BN | 1 | 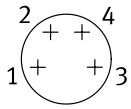 | 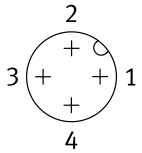 |
| | 2 | WH | 2 | | |
| | 3 | BU | 3 | | |
| | 4 | BK | 4 | | |
| **Electrical connection, open cable end, 5-wire – plug, 5-pin, M12** | | | | | **Plug M12** |
| – | – | BN | 1 | | 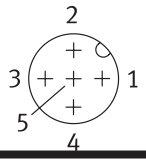 |
| | – | WH | 2 | | |
| | – | BU | 3 | | |
| | – | BK | 4 | | |
| | – | GY | 5 | | |

1) To IEC 757

# Data sheet

**Dimensions** Download CAD data ➔ www.festo.com

Connection technology, left

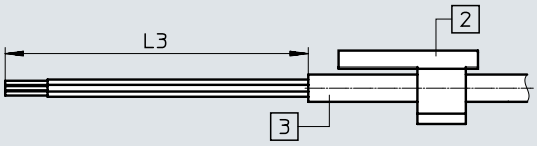


Connection technology, right

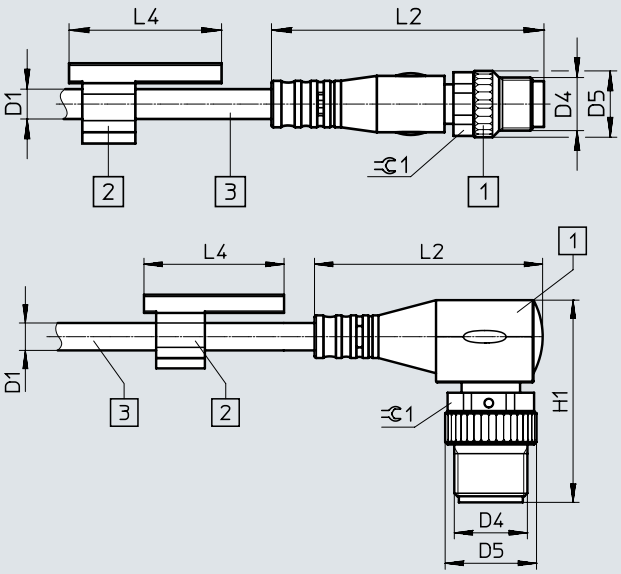


[1] Plug
[2] Inscription label holder
[3] Cable, length 0.1 ... 30 m depending on the order

| Connection technology, left | L3 |
|---|---|
| Open end | 50 |

| Connection technology, right | D1 ⌀ | D4 | D5 ⌀ | L2 | L4 | H1 | ⊂1 |
|---|---|---|---|---|---|---|---|
| Straight plug | 4.5 | M8x1 | 10 | 41.1 | 23 | – | 9 |
| | 4.5 | M12x1 | 15 | 54.5 | 23 | – | 13 |
| Angled plug | 4.5 | M8x1 | 10 | 26.9 | 23 | 24 | 9 |
| | 4.5 | M12x1 | 15 | 37.5 | 23 | 33.2 | 13 |

# Data sheet

| Ordering data | Cable characteristic | Cable length [m] | Outlet direction | Special features | Product weight [g] | Part no. | Type |
|---|---|---|---|---|---|---|---|
| **Open cable end, 3-wire – plug, 3-pin, M12** | | | | | | | |
| 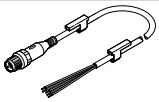 | Standard | 1 | Straight | Without inscription label holder | 35 | **8091515** | **NEBU-LE3-K-1-N-M12G3** |
| **Open cable end, 5-wire – plug, 5-pin, M12** | | | | | | | |
| 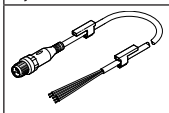 | Standard | 1 | Straight | – | 41 | **569840** | **NEBU-LE5-K-1-M12G5** |

| Ordering data – Accessories | Designation | | Part no. | Type |
|---|---|---|---|---|
| **Plugs** | | | | |
| 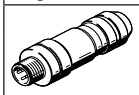 | Plugs for self-assembly | | – | → Internet: necu |
| | | | – | → Internet: sea |
| **Inscription labels** | | | | |
| 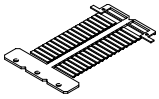 | Inscription labels 23 mm for holder, 34 pieces, in frame | | **541598** | **ASLR-L-423** |
| **Safety clip** | | | | |
|  | Prevents the screw-type lock from being released easily (without a tool), to be fastened securely to the cable | For M12 | **548068** | **NEAU-M12-GD** |

# Data sheet

**Connecting cable**
**NEBU-M8**
**SIM-M8**

- Connecting cable for connecting inputs/outputs
- Pre-assembled at one end, pre-assembled at both ends
- Cable lengths 0.1 … 30 m
- 3 wires
- M8x1 socket, 3-pin

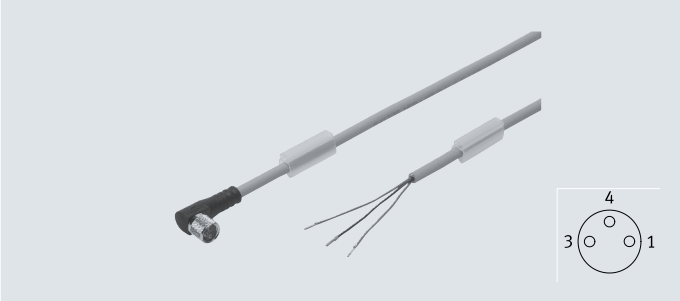


| General technical data | | | |
|---|---|---|---|
| Type | | NEBU | SIM |
| Conforms to standard | Code -K-, code -E- | EN 61076-2-104 | – |
| | | EN 61076-2-101 | – |
| | | Wire colours and connection numbers to EN 60947-5-2 | – |
| | Code -R- | Wire colours and connection numbers to EN 60947-5-2 | – |
| | | – | EN 61076-2-104 |
| | | – | EN 61984 |
| Based on standard | Code -R- | EN 61076-2-104 | – |
| Cable designation | | With 2x inscription label holders | – |
| Degree of protection | | IP65, IP68, IP69K | IP65, IP68 |
| Note on degree of protection | | In assembled state | – |

| Technical data – Electrical connection 1 | | | |
|---|---|---|---|
| Type | | NEBU | SIM |
| Function | | Field device side | Field device side |
| Design | | Round | Round |
| Connection type | | Socket | Socket |
| Cable outlet | | Straight, angled | Straight, angled |
| Connection technology | | M8x1, A-coded to EN 61076-2-104 | M8x1, A-coded to EN 61076-2-104 |
| Number of pins/wires | | 3 | 3 |
| Assigned pins/wires | | 3 | 3 |
| Type of mounting | | Screw-type lock | – |

| Technical data – Electrical components | | | | |
|---|---|---|---|---|
| Type | | | NEBU | SIM |
| Operating voltage range | Without switching status indication | [V DC] | 0 … 60 | 0 … 60 |
| | | [V AC] | 0 … 60 | 0 … 60 |
| | With switching status indication | [V DC] | 10 … 30 | 10 … 30 |
| | Electrical connection 2 M8x1, 4-pin | [V DC] | 0 … 30 | – |
| | | [V AC] | 0 … 30 | – |
| Surge resistance | Connection technology not rotatable, without switching status indication | [kV] | 1.5 | 1.5 |
| | Connection technology rotatable | [kV] | 0.8 | – |
| | With switching status indication | [kV] | 0.8 | 0.8 |
| Current rating at 40°C | Connection technology not rotatable | [A] | 3 | 4 |
| | Connection technology rotatable | [A] | 0.5 | – |

# Data sheet

| **Technical data – Cable** | | | | | |
|---|---|---|---|---|---|
| Type | | | | NEBU | SIM |
| Cable characteristic | | Code -K- | | Standard | – |
| | | Code -E- | | Suitable for energy chains | – |
| | | Code -R- | | Suitable for robot applications | – |
| | | | | – | Standard |
| Cable testing conditions | | | | Bending strength: to Festo standard | Bending strength: to Festo standard |
| | | | | Test conditions on request | Test conditions on request |
| | Cable characteristic | Standard | | Energy chain: 5 million cycles, bending radius 75 mm | Energy chain: 5 million cycles, bending radius 75 mm |
| | | Suitable for energy chains | | Energy chain: 5 million cycles, bending radius 28 mm | – |
| | | Suitable for robot applications | | Energy chain: 5 million cycles, bending radius 28 mm | – |
| | | | | Torsional resistance more than 300000 cycles, ±270°/0.1 m | – |
| Cable diameter | Without switching status indication | | [mm] | 4.5 | 4.5 |
| | With switching status indication | | [mm] | 3.4 | – |
| Cable diameter tolerance | | | [mm] | ±0.1 | – |
| Cable composition | | | [mm²] | 3x 0.25 | 3x 0.25 |
| Conductor nominal cross section | | | [mm²] | 0.25 | 0.25 |

| **Technical data – Electrical connection 2** | | | | | |
|---|---|---|---|---|---|
| Type | | NEBU | | | SIM |
| Function | | Controller side | | | |
| Connection type | | Cable | Plug | Plug | Cable |
| Design | | – | Round | Round | – |
| Cable outlet | | – | Straight, angled | Straight, angled | – |
| Connection technology | | Open end | M8x1, A-coded to EN 61076-2-104 | M12x1, A-coded to EN 61076-2-101 | Open end |
| Number of pins/wires | | 3 | 3 / 4 | 3 | 3 |
| Assigned pins/wires | Without switching status indication | 3 | 3 / 3 | 3 | 3 |
| | With switching status indication | 3 | 3 / 3 | 3 | – |
| Type of mounting | | – | Screw-type lock | Screw-type lock | – |

# Data sheet

| **Materials** | | | |
|---|---|---|---|
| Type | | NEBU | SIM |
| Housing | | TPE-U(PUR) | TPE-U(PU) |
| Housing colour | | Black | Black |
| Cable sheath | | TPE-U(PUR) | TPE-U(PU) |
| Cable sheath colour | | Grey | Grey |
| Insulating sheath | | PP | PP |
| Wire insulation colour code | | – | Blue, brown, black |
| Screw-type lock | | Nickel-plated brass | Nickel-plated brass |
| Note on materials | | RoHS-compliant | RoHS-compliant |
| | | Free of copper and PTFE | – |
| | | Halogen-free | Halogen-free |
| | | Free of phosphoric acid ester | Free of phosphoric acid ester |
| Special characteristics | Cable characteristic: standard, suitable for energy chains, suitable for robot applications | Oil resistant | – |

| **Operating and environmental conditions** | | | | |
|---|---|---|---|---|
| Type | | | NEBU | SIM |
| Ambient temperature | Cable characteristic: standard | [°C] | –25 … +70 | –25 … +80 |
| | Cable characteristic: suitable for energy chains, suitable for robot applications | [°C] | –25 … +80 | – |
| Ambient temperature with flexible cable installation | Cable characteristic: standard | [°C] | –5 … +70 | –5 … +80 |
| | Cable characteristic: suitable for energy chains, suitable for robot applications | [°C] | –5 … +80 | – |
| Corrosion resistance CRC[1)] | | | 2 | 2 |
| CE marking (see declaration of conformity)[2)] | All types | | – | To EU RoHS Directive |
| | Without switching status indication | | To EU Low-Voltage Directive | To EU Low-Voltage Directive |
| | With switching status indication | | – | – |
| | Electrical connection 2 M8x1, 4-pin | | – | – |
| Pollution degree | | | 3 | 3 |

1) Corrosion resistance class CRC 2 to Festo standard FN 940070
Moderate corrosion stress. Indoor applications in which condensation can occur. External visible parts with primarily decorative surface requirements which are in direct contact with a normal industrial environment.
2) Additional information www.festo.com/sp → Certificates.

# Data sheet

**Circuitry (socket view)**

| Electrical connection 1 | Pin | Wire colour[1] | Pin | Electrical connection 2 |
|---|---|---|---|---|
| **Electrical connection, socket, 3-pin, M8 – open cable end** | | | | |
| 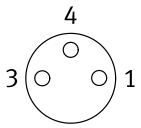 | 1 | BN | – | – |
| | 3 | BU | – | |
| | 4 | BK | – | |

| Electrical connection, socket, 3-pin, M8 – plug, 3-pin | | | | Plug M8 | Plug M12 |
|---|---|---|---|---|---|
| 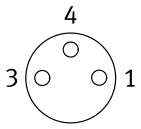 | 1 | BN | 1 | 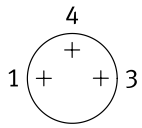 | 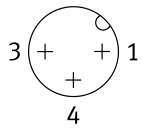 |
| | 3 | BU | 3 | | |
| | 4 | BK | 4 | | |

| Electrical connection, socket, 3-pin, M8 – plug, 4-pin, M8 | | | | Plug M8 |
|---|---|---|---|---|
| 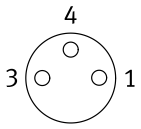 | 1 | BN | 1 | 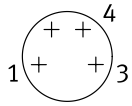 |
| | – | – | 2 | |
| | 3 | BU | 3 | |
| | 4 | BK | 4 | |

1) To IEC 757

**Circuitry, switching status indication**

| Display of code P, for PNP N/O contact | Display of code N, for NPN N/O contact |
|---|---|
| 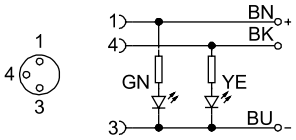 | 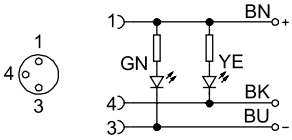 |

# Data sheet

**Dimensions** Download CAD data ➔ www.festo.com

Connection technology, left

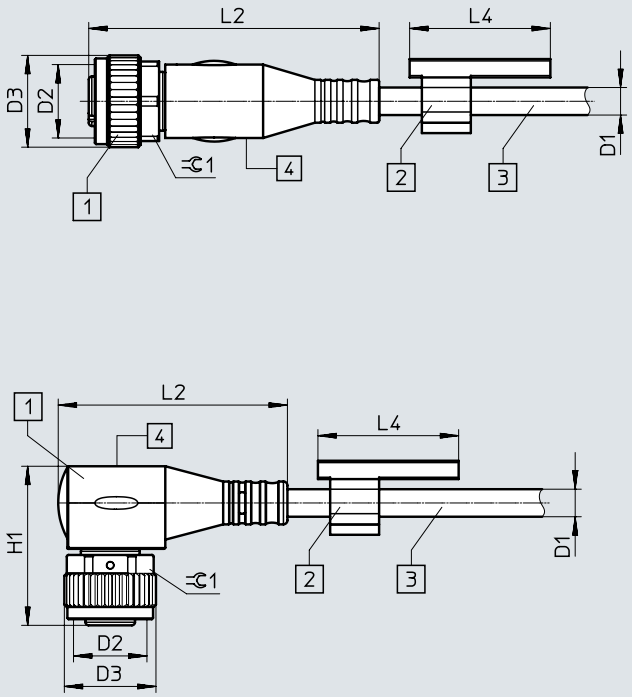


Connection technology, right

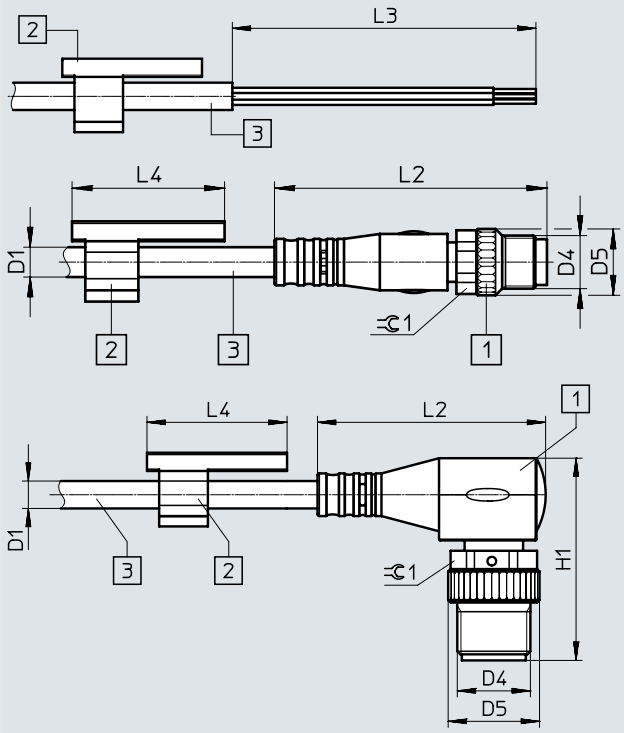


[1] Socket M8x1
[2] Inscription label holder
[3] Cable, length 0.1 ... 30 m depending on the order
[4] Display field with version P, N

| Connection technology, left | D1 ø | D2 | D3 ø | L2 | L4 | H1 | ⊂1 |
|---|---|---|---|---|---|---|---|
| **NEBU** | | | | | | | |
| Straight socket | 4.5 | M8x1 | 10 | 34.6 | 23 | – | 9 |
| Angled socket | 4.5 | M8x1 | 10 | 26.9 | 23 | 17 | 9 |
| Rotatable socket | 4.5 | M8x1 | 10 | 20.9 | 23 | 16.3 | 9 |
| **NEBU with display** | | | | | | | |
| Straight socket | 3.4 | M8x1 | 10 | 34.6 | 23 | – | 9 |
| Angled socket | 3.4 | M8x1 | 10 | 26.9 | 23 | 17 | 9 |
| **SIM** | | | | | | | |
| Straight socket | 4.5 | M8x1 | 10 | 34.6 | – | – | 9 |
| Angled socket | 4.5 | M8x1 | 10 | 26.9 | – | 17 | 9 |

| Connection technology, right | D1 ø | D4 | D5 ø | L2 | L3 | L4 | H1 | ⊂1 |
|---|---|---|---|---|---|---|---|---|
| **NEBU** | | | | | | | | |
| Open end | 4.5 | – | – | – | 50 | 23 | – | – |
| Straight plug | 4.5 | M8x1 | 10 | 41.1 | – | 23 | – | 9 |
| | 4.5 | M12x1 | 15 | 54.5 | – | 23 | – | 13 |
| Angled plug | 4.5 | M8x1 | 10 | 26.9 | – | 23 | 24 | 9 |
| | 4.5 | M12x1 | 15 | 37.5 | – | 23 | 33.2 | 13 |
| **NEBU with display** | | | | | | | | |
| Straight plug | 3.4 | M8x1 | 10 | 41.1 | – | 23 | – | 9 |
| | 3.4 | M12x1 | 15 | 54.5 | – | 23 | – | 13 |
| Angled plug | 3.4 | M8x1 | 10 | 26.9 | – | 23 | 24 | 9 |
| | 3.4 | M12x1 | 15 | 37.5 | – | 23 | 33.2 | 13 |
| **SIM** | | | | | | | | |
| Open end | 4.5 | – | – | – | 50 | – | – | – |

# Data sheet

| Ordering data | Cable characteristic | Cable length [m] | Outlet direction | Special features | Product weight [g] | Part no. | Type |
|---|---|---|---|---|---|---|---|
| **Socket, 3-pin, M8 – open cable end** | | | | | | | |
| 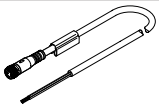 | Standard | 2.5 | Straight | – | 64 | ★ 541333 | NEBU-M8G3-K-2.5-LE3 |
| | | | | | – | 159420 | SIM-M8-3GD-2,5-PU |
| | | | Angled | – | 64 | ★ 541338 | NEBU-M8W3-K-2.5-LE3 |
| | | | | | – | 159422 | SIM-M8-3WD-2,5-PU |
| | | | | Rotatable socket | 64 | 8001660 | NEBU-M8R3-K-2.5-LE3 |
| | | | | For NPN N/O contact, switching status indication yellow, ready status indication green | 64 | 541336 | NEBU-M8W3N-K-2.5-LE3 |
| | | | | | – | 159426 | SIM-M8-3WD-2.5-NSL-PU |
| | | | | For PNP N/O contact, switching status indication yellow, ready status indication green | 64 | 541337 | NEBU-M8W3P-K-2.5-LE3 |
| | | | | | – | 159424 | SIM-M8-3WD-2.5-PSL-PU |
| | | 5 | Straight | – | 123 | ★ 541334 | NEBU-M8G3-K-5-LE3 |
| | | | | | – | 159421 | SIM-M8-3GD-5-PU |
| | | | Angled | – | 123 | ★ 541341 | NEBU-M8W3-K-5-LE3 |
| | | | | | – | 159423 | SIM-M8-3WD-5-PU |
| | | | | Rotatable socket | 123 | 8001661 | NEBU-M8R3-K-5-LE3 |
| | | | | For NPN N/O contact, switching status indication yellow LED, ready status indication green LED | 123 | 541339 | NEBU-M8W3N-K-5-LE3 |
| | | | | | – | 159427 | SIM-M8-3WD-5-NSL-PU |
| | | | | For PNP N/O contact, switching status indication yellow LED, ready status indication green LED | 123 | 541340 | NEBU-M8W3P-K-5-LE3 |
| | | | | | – | 159425 | SIM-M8-3WD-5-PSL-PU |
| | | 10 | Straight | – | 242 | ★ 541332 | NEBU-M8G3-K-10-LE3 |
| | | | | – | – | 192964 | SIM-M8-3GD-10-PU |
| | | | Angled | – | 242 | ★ 541335 | NEBU-M8W3-K-10-LE3 |
| | | | | – | – | 192965 | SIM-M8-3WD-10-PU |
| | Suitable for use with energy chains | 5 | Straight | – | 123 | 569843 | NEBU-M8G3-E-5-LE3 |
| | | 10 | Straight | – | 242 | 569842 | NEBU-M8G3-E-10-LE3 |
| | Suitable for robot applications | 2.5 | Straight | – | 64 | 569845 | NEBU-M8G3-R-2.5-LE3 |
| | | | Angled | – | 64 | 569847 | NEBU-M8W3-R-2.5-LE3 |
| | | 5 | Straight | – | 123 | 569846 | NEBU-M8G3-R-5-LE3 |
| | | 10 | Straight | – | 242 | 8003129 | NEBU-M8G3-R-10-LE3 |
| **Socket, 3-pin, M8 – plug, 3-pin, M8** | | | | | | | |
| 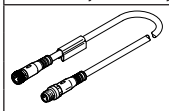 | Standard | 0.5 | Straight – straight | – | 22 | ★ 541346 | NEBU-M8G3-K-0.5-M8G3 |
| | | 1 | | | 33 | ★ 541347 | NEBU-M8G3-K-1-M8G3 |
| | | 1.5 | | | 45 | 8003133 | NEBU-M8G3-K-1.5-M8G3 |
| | | 2 | | | 57 | 8003131 | NEBU-M8G3-K-2-M8G3 |
| | | 2.5 | | | 69 | ★ 541348 | NEBU-M8G3-K-2.5-M8G3 |
| | | 3 | | | 80 | 8003132 | NEBU-M8G3-K-3-M8G3 |
| | | 5 | | | 128 | ★ 541349 | NEBU-M8G3-K-5-M8G3 |
| | | 10 | | | 246 | 569844 | NEBU-M8G3-K-10-M8G3 |
| | Suitable for use with energy chains | 3.5 | Straight – straight | – | 92 | 559364 | NEBU-M8G3-E-3.5-M8G3 |

| | | |
|---|---|---|
| Festo core product range | ★ | Generally ready for dispatch from the factory within 24 hours |
| | ☆ | Generally ready for dispatch from the factory within 5 days |

# Data sheet

| Ordering data | Cable characteristic | Cable length [m] | Outlet direction | Special features | Product weight [g] | Part no. | Type |
|---|---|---|---|---|---|---|---|
| **Socket, 3-pin, M8 – plug, 4-pin, M8** | | | | | | | |
| 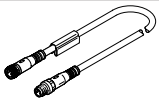 | Standard | 2.5 | Straight – straight | – | 69 | **554037** | **NEBU-M8G3-K-2.5-M8G4** |
| **Socket, 3-pin, M8 – plug, 3-pin, M12** | | | | | | | |
| 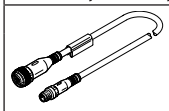 | Standard | 0.5 | Straight – straight | – | 29 | **8000209** | **NEBU-M8G3-K-0.5-M12G3** |
| | | 1 | Straight – straight | Without inscription label holder | 39 | **8091512** | **NEBU-M8G3-K-1-N-M12G3** |

| Ordering data – Accessories<br>Designation | | | Part no. | Type |
|---|---|---|---|---|
| **Plugs** | | | | |
| 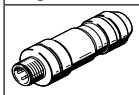 | Plugs for self-assembly | | – | ➔ Internet: necu |
| | | | – | ➔ Internet: sea |
| **Inscription labels** | | | | |
| 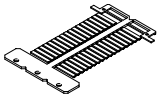 | Inscription labels 23 mm for holder, 34 pieces, in frame | | **541598** | **ASLR-L-423** |
| **Safety clip** | | | | |
|  | Prevents the screw-type lock from being released easily (without a tool), to be fastened securely to the cable | For M8 | **548067** | **NEAU-M8-GD** |
| | | For M12 | **548068** | **NEAU-M12-GD** |

# Data sheet

**Connecting cable**
**NEBU-M8**
**SIM-M8**

- Connecting cable for connecting inputs/outputs
- Pre-assembled at one end, pre-assembled at both ends
- Cable lengths 0.1 … 30 m
- 2, 3 or 4 wires
- M8x1 socket, 4-pin


| General technical data | | | |
|---|---|---|---|
| Type | | NEBU | SIM |
| Conforms to standard | Code -K-, code -E- | EN 61076-2-104 | – |
| | | EN 61076-2-101 | – |
| | | Wire colours and connection numbers to EN 60947-5-2 | – |
| | Code -R- | Wire colours and connection numbers to EN 60947-5-2 | – |
| | | – | EN 61076-2-104 |
| | | – | EN 61984 |
| Based on standard | Code -R- | EN 61076-2-104 | – |
| Cable designation | | With 2x inscription label holders | – |
| Degree of protection | | IP65, IP68, IP69K | IP65, IP68 |
| Note on degree of protection | | In assembled state | – |

| Technical data – Electrical connection 1 | | | |
|---|---|---|---|
| Type | | NEBU | SIM |
| Function | | Field device side | Field device side |
| Design | | Round | Round |
| Connection type | | Socket | Socket |
| Cable outlet | | Straight, angled | Straight, angled |
| Connection technology | | M8x1, A-coded to EN 61076-2-104 | M8x1, A-coded to EN 61076-2-104 |
| Number of pins/wires | | 4 | 4 |
| Assigned pins/wires | | 2 3 4 | 4 |
| Type of mounting | | Screw-type lock | – |

| Technical data – Electrical components | | | | |
|---|---|---|---|---|
| Type | | | NEBU | SIM |
| Operating voltage range | Without switching status indication | [V DC] | 0 … 30 | 0 … 30 |
| | | [V AC] | 0 … 30 | 0 … 30 |
| | With switching status indication | [V DC] | 21.6 … 30 | – |
| | | [V AC] | 21.6 … 30 | – |
| Surge resistance | | [kV] | 0.8 | 0.8 |
| Current rating at 40°C | | [A] | 3 | 4 |

# Data sheet

| **Technical data – Cable** | | | | | |
|---|---|---|---|---|---|
| Type | | | NEBU | | SIM |
| Cable characteristic | | Code -K- | Standard | | – |
| | | Code -E- | Suitable for energy chains | | – |
| | | Code -R- | Suitable for robot applications | | – |
| | | | – | | Standard |
| Cable testing conditions | | | Bending strength: to Festo standard | | Bending strength: to Festo standard |
| | | | Test conditions on request | | Test conditions on request |
| | Cable characteristic | Standard | Energy chain: 5 million cycles, bending radius 75 mm | | Energy chain: 5 million cycles, bending radius 75 mm |
| | | Suitable for energy chains | Energy chain: 5 million cycles, bending radius 28 mm | | – |
| | | Suitable for robot applications | Energy chain: 5 million cycles, bending radius 28 mm | | – |
| | | | Torsional resistance more than 300000 cycles, ±270°/0.1 m | | – |
| Cable diameter | Without switching status indication | [mm] | 4.5 | | 4.5 |
| | With switching status indication | [mm] | 3.4 | | – |
| Cable diameter tolerance | | [mm] | ±0.1 | | – |
| Cable composition | Without switching status indication | [mm²] | 3x 0.25 | 4x 0.25 | 4x 0.25 |
| | With switching status indication | [mm²] | 2x 0.25 | | – |
| Conductor nominal cross section | | [mm²] | 0.25 | | 0.25 |

| **Technical data – Electrical connection 2** | | | | | |
|---|---|---|---|---|---|
| Type | | NEBU | | | SIM |
| Function | | Controller side | | | |
| Connection type | | Cable | Plug | Plug | Cable |
| Design | | – | Round | Round | – |
| Cable outlet | | – | Straight, angled | Straight, angled | – |
| Connection technology | | Open end | M8x1, A-coded to EN 61076-2-104 | M12x1, A-coded to EN 61076-2-101 | Open end |
| Number of pins/wires | | 4 | 3 4 | 4 | 4 |
| Assigned pins/wires | Without switching status indication | 4 | 3 4 | 4 | 4 |
| | With switching status indication | 2 | 3 4 | 2 | – |
| Type of mounting | | – | Screw-type lock | Screw-type lock | – |

# Data sheet

| **Materials** | | | |
|---|---|---|---|
| Type | | NEBU | SIM |
| Housing | | TPE-U(PUR) | TPE-U(PU) |
| Housing colour | | Black | Black |
| Cable sheath | Cable characteristic: standard, suitable for energy chains, suitable for robot applications | TPE-U(PUR) | TPE-U(PU) |
| Cable sheath colour | | Grey | Grey |
| Insulating sheath | Cable characteristic: suitable for energy chains, suitable for robot applications, standard | PP | PP |
| Wire insulation colour code | | – | Blue, brown, black, white |
| Screw-type lock | | Nickel-plated brass | Nickel-plated brass |
| Note on materials | All types | RoHS-compliant | RoHS-compliant |
| | | Free of copper and PTFE | – |
| | Cable characteristic: standard, suitable for energy chains, suitable for robot applications | Halogen-free | Halogen-free |
| | | Free of phosphoric acid ester | Free of phosphoric acid ester |
| Special characteristics | Cable characteristic: standard, suitable for energy chains, suitable for robot applications | Oil resistant | – |

| **Operating and environmental conditions** | | | | |
|---|---|---|---|---|
| Type | | | NEBU | SIM |
| Ambient temperature | Cable characteristic: standard | [°C] | –25 … +70 | –25 … +80 |
| | Cable characteristic: suitable for energy chains, suitable for robot applications | [°C] | –25 … +80 | – |
| Ambient temperature with flexible cable installation | Cable characteristic: standard | [°C] | –5 … +70 | –5 … +80 |
| | Cable characteristic: suitable for energy chains, suitable for robot applications | [°C] | –5 … +80 | – |
| Corrosion resistance CRC[1] | | | 2 | 2 |
| CE marking (see declaration of conformity)[2] | | | – | To EU RoHS Directive |
| | Electrical connection 2:<br>• Plug M8, 3-pin<br>• Plug M12, 3-pin<br>• Plug M12, 4-pin | | To EU Low-Voltage Directive | – |
| Pollution degree | | | 3 | 3 |

1) Corrosion resistance class CRC 2 to Festo standard FN 940070
Moderate corrosion stress. Indoor applications in which condensation can occur. External visible parts with primarily decorative surface requirements which are in direct contact with a normal industrial environment.
2) Additional information www.festo.com/sp → Certificates.

# Data sheet

**Circuitry (socket view)**

| Socket | Pin | Wire colour[1] | Pin | Plug | |
|---|---|---|---|---|---|
| **Electrical connection, socket, 4-pin, M8 – open cable end** | | | | | |
| 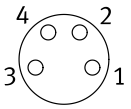 | 1 | BN | – | – | |
| | 2 | WH | – | | |
| | 3 | BU | – | | |
| | 4 | BK | – | | |
| **Electrical connection, socket, 4-pin, M8 – plug, 3-pin** | | | | **Plug M8** | |
| 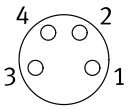 | 1 | BN | 1 | 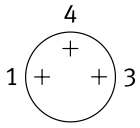 | |
| | 2 | WH | – | | |
| | 3 | BU | 3 | | |
| | 4 | BK | 4 | | |
| **Electrical connection, socket, 4-pin, M8 – plug, 4-pin** | | | | **Plug M8** | **Plug M12** |
| 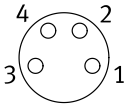 | 1 | BN | 1 | 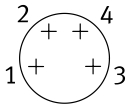 | 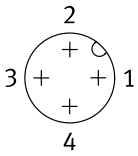 |
| | 2 | WH | 2 | | |
| | 3 | BU | 3 | | |
| | 4 | BK | 4 | | |
| **Electrical connection, socket, 4-pin, M8, with display of code L** | | | | **Plug M8, 3-pin** | **Plug M12, 3-pin** |
| 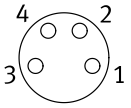 | 1 | – | 1 | 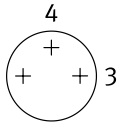 | 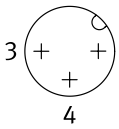 |
| | 2 | – | 2 | | |
| | 3 | BK | 3 | | |
| | 4 | BK | 4 | | |
| | | | | **Plug M8, 4-pin** | **Open cable end** |
| | | | | 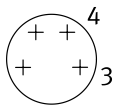 | – |

1) To IEC 757

**Circuitry, switching status indication**

Display of code L

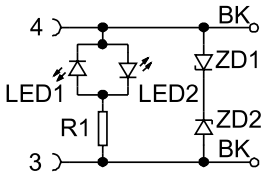

# Data sheet

**Dimensions** Download CAD data ➔ www.festo.com

Connection technology, left

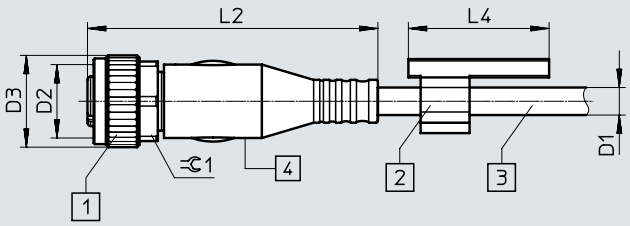


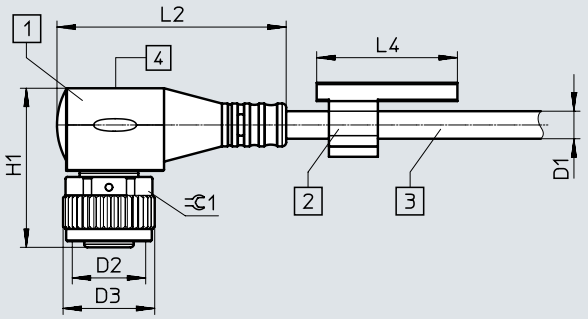


Connection technology, right

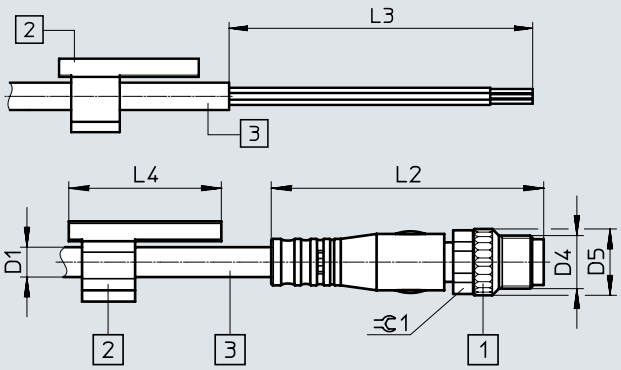


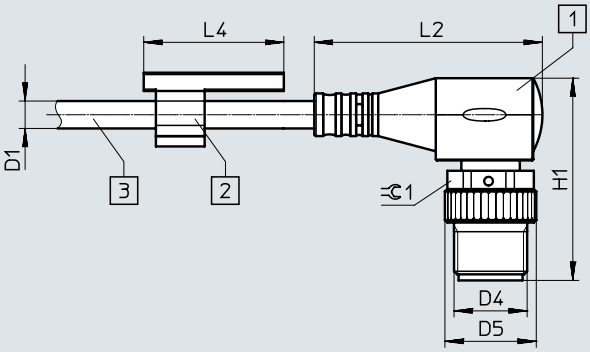


[1] Socket M8x1
[2] Inscription label holder
[3] Cable, length 0.1 ... 30 m depending on the order
[4] Display field with version L

| Connection technology, left | D1 ø | D2 | D3 ø | L2 | L4 | H1 | =C1 |
|---|---|---|---|---|---|---|---|
| **NEBU** | | | | | | | |
| Straight socket | 4.5 | M8x1 | 10 | 34.6 | 23 | – | 9 |
| Angled socket | 4.5 | M8x1 | 10 | 26.9 | 23 | 17 | 9 |
| Rotatable socket | 4.5 | M8x1 | 10 | 20.9 | 23 | 16.3 | 9 |
| **NEBU with display** | | | | | | | |
| Straight socket | 3.4 | M8x1 | 10 | 34.6 | 23 | – | 9 |
| Angled socket | 3.4 | M8x1 | 10 | 26.9 | 23 | 17 | 9 |
| **SIM** | | | | | | | |
| Straight socket | 4.5 | M8x1 | 10 | 34.6 | – | – | 9 |
| Angled socket | 4.5 | M8x1 | 10 | 26.9 | – | 17 | 9 |

| Connection technology, right | D1 ø | D4 | D5 ø | L2 | L3 | L4 | H1 | =C1 |
|---|---|---|---|---|---|---|---|---|
| **NEBU** | | | | | | | | |
| Open end | 4.5 | – | – | – | 50 | 23 | – | – |
| Straight plug | 4.5 | M8x1 | 10 | 41.1 | – | 23 | – | 9 |
| | 4.5 | M12x1 | 15 | 54.5 | – | 23 | – | 13 |
| Angled plug | 4.5 | M8x1 | 10 | 26.9 | – | 23 | 24 | 9 |
| | 4.5 | M12x1 | 15 | 37.5 | – | 23 | 33.2 | 13 |
| **NEBU with display** | | | | | | | | |
| Straight plug | 3.4 | M8x1 | 10 | 41.1 | – | 23 | – | 9 |
| | 3.4 | M12x1 | 15 | 54.5 | – | 23 | – | 13 |
| Angled plug | 3.4 | M8x1 | 10 | 26.9 | – | 23 | 24 | 9 |
| | 3.4 | M12x1 | 15 | 37.5 | – | 23 | 33.2 | 13 |
| **SIM** | | | | | | | | |
| Open end | 4.5 | – | – | – | 50 | – | – | – |

# Data sheet

**Ordering data**

| | Cable characteristic | Cable length [m] | Outlet direction | Special features | Product weight [g] | Part no. | Type |
|---|---|---|---|---|---|---|---|
| **Socket, 4-pin, M8 – open cable end** | | | | | | | |
| 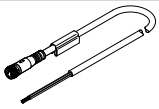 | Standard | 2.5 | Straight | – | 72 | **541342** | **NEBU-M8G4-K-2.5-LE4** |
| | | | | | – | **158960** | **SIM-M8-4GD-2,5-PU** |
| | | | Angled | – | 72 | **541344** | **NEBU-M8W4-K-2.5-LE4** |
| | | | | | – | **158962** | **SIM-M8-4WD-2,5-PU** |
| | | 5 | Straight | – | 138 | **541343** | **NEBU-M8G4-K-5-LE4** |
| | | | | | – | **158961** | **SIM-M8-4GD-5-PU** |
| | | | Angled | – | 138 | **541345** | **NEBU-M8W4-K-5-LE4** |
| | | | | | – | **158963** | **SIM-M8-4WD-5-PU** |
| | | 9 | Straight | – | 245 | **8003130** | **NEBU-M8G4-K-9-LE4** |
| | | 10 | Angled | – | 272 | **575833** | **NEBU-M8W4-K-10-LE4** |
| **Socket, 4-pin, M8 – plug, 4-pin, M8** | | | | | | | |
| 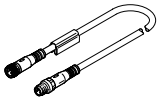 | Standard | 2.5 | Straight – straight | – | 76 | **554035** | **NEBU-M8G4-K-2.5-M8G4** |
| | Suitable for robot applications | 2 | Straight – straight | – | 63 | **556946** | **NEBU-M8G4-R-2-M8G4** |
| **Socket, 4-pin, M8 – plug, 4-pin, M12** | | | | | | | |
| 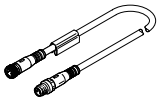 | Standard | 1 | Straight – straight | Without inscription label holder | 42.5 | **8091513** | **NEBU-M8G4-K-1-N-M12G4** |

**Ordering data – Accessories**

| | Designation | Part no. | Type |
|---|---|---|---|
| **Plugs** | | | |
| 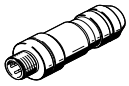 | Plugs for self-assembly | – | → Internet: necu |
| | | – | → Internet: sea |
| **Inscription labels** | | | |
| 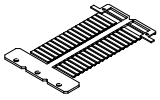 | Inscription labels 23 mm for holder, 34 pieces, in frame | **541598** | **ASLR-L-423** |
| **Safety clip** | | | |
|  | Prevents the screw-type lock from being released easily (without a tool), to be fastened securely to the cable | For M8: **548067** | **NEAU-M8-GD** |
| | | For M12: **548068** | **NEAU-M12-GD** |

# Data sheet

**Connecting cable**
**SIM-M12**

- Connecting cable for connecting inputs/outputs
- Pre-assembled at one end
- Cable length 3 m
- 3 wires
- M12x1 socket, 4-pin


| General technical data | |
|---|---|
| Conforms to standard | EN 61076-2-101 |
| | EN 61984 |
| | Wire colours and connection numbers to EN 60947-5-2 |
| Cable designation | Without inscription label holder |
| Degree of protection | IP65, IP67 |
| Note on degree of protection | In assembled state |

| Technical data – Electrical connection 1 | |
|---|---|
| Function | Field device side |
| Design | Round |
| Connection type | Socket |
| Cable outlet | Straight, angled |
| Connection technology | M12x1, A-coded to EN 61076-2-101 |
| Number of pins/wires | 4 |
| Assigned pins/wires | 3 |
| Type of mounting | Screw-type lock |

| Technical data – Electrical components | | |
|---|---|---|
| Operating voltage range | [V DC] | 0 ... 70 |
| | [V AC] | 0 ... 45 |
| Surge resistance | [kV] | 2.5 |
| Current rating at 40°C | [A] | 4 |

# Data sheet

| Technical data – Cable | | | |
|---|---|---|---|
| Cable characteristic | | | Resistant to welding spatter |
| Cable testing conditions | | | Bending strength: to Festo standard |
| | | | Test conditions on request |
| | | | Energy chain: 5 million cycles, bending radius 75 mm |
| Bending radius | Fixed cable installation | [mm] | ≥28 |
| | Flexible cable installation | [mm] | ≥55 |
| Cable diameter | | [mm] | 5.2 |
| Cable diameter tolerance | | [mm] | ±0.3 |
| Cable composition | | [mm²] | 3x 0.5 |
| Conductor nominal cross section | | [mm²] | 0.5 |

| Technical data – Electrical connection 2 | |
|---|---|
| Function | Controller side |
| Connection type | Cable |
| Connection technology | Open end |
| Number of pins/wires | 3 |
| Assigned pins/wires | 3 |
| Wire ends | Wire end sleeve |

| Materials | |
|---|---|
| Housing | TPE-U(PUR) |
| Housing colour | Black |
| Screw-type lock | Chrome-plated brass |
| Cable sheath | PVC, irradiated |
| Cable sheath colour | Orange |
| Insulating sheath | PVC, irradiated |
| Pin contacts | Gold-plated brass |

| Operating and environmental conditions | | |
|---|---|---|
| Ambient temperature | [°C] | –25 ... +80 |
| Ambient temperature with flexible cable installation | [°C] | 0 ... +80 |
| Pollution degree | | 3 |

**Circuitry (socket view)**

| Socket | Pin | Wire colour[1] | Pin | Plug |
|---|---|---|---|---|
| **Electrical connection, socket, 4-pin, M12 – open cable end** | | | | |
| 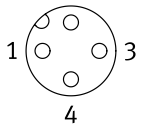  | 1 | BN | – | – |
| | 2 | – | – | |
| | 3 | BU | – | |
| | 4 | BK | – | |

1) To IEC 757

# Data sheet

**Dimensions** Download CAD data ➔ www.festo.com

SIM-M12-RS-3GD-3

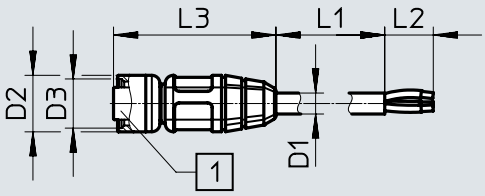


[1] Socket M12x1

SIM-M12-RS-3WD-3

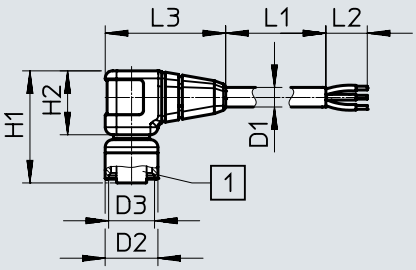


[1] Socket M12x1

| Type | D1 ⌀ | D2 | D3 ⌀ | L1 | L2 | L3 | H1 | H2 | D1 ⌀ |
|---|---|---|---|---|---|---|---|---|---|
| SIM-M12-RS-3GD-3 | 5.2 | M12x1 | 14 | 3000 | 50 | 40 | – | – | 5.2 |
| SIM-M12-RS-3WD-3 | 5.2 | M12x1 | 14 | 3000 | 50 | 32 | 30 | 17 | 5.2 |

**Ordering data**

| | Cable characteristic | Cable length [m] | Outlet direction | Special features | Product weight [g] | Part no. | Type |
|---|---|---|---|---|---|---|---|
| **Socket, 4-pin, M12 – open cable end** | | | | | | | |
| 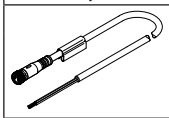 | Resistant to welding spatter | 3 | Straight | Resistant to welding spatter | – | **30450** | **SIM-M12-RS-3GD-3** |
| | | | Angled | Resistant to welding spatter | – | **30451** | **SIM-M12-RS-3WD-3** |

# Data sheet

**Connecting cable**
**NEBU-M12**
**SIM-M12**

- Connecting cable for connecting inputs/outputs
- Pre-assembled at one end, pre-assembled at both ends
- Cable lengths 0.1 … 30 m
- 2, 3, 4 or 5 wires
- M12x1, 5-pin

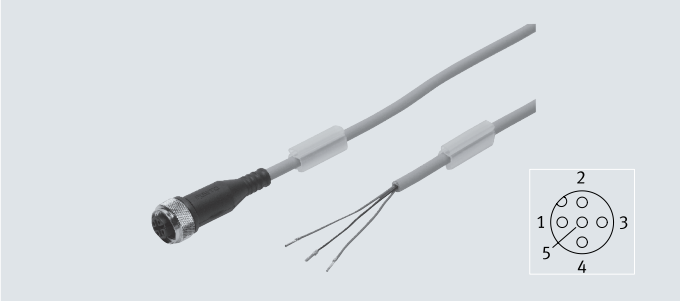


| General technical data | | | |
|---|---|---|---|
| Type | | NEBU | SIM |
| Conforms to standard | | EN 61076-2-101 | EN 61076-2-101 |
| | | EN 61076-2-104 | – |
| | | Wire colours and connection numbers to EN 60947-5-2 | – |
| | | – | EN 61984 |
| Cable designation | | With 2x inscription label holders | – |
| | NEBU-M12G5-…-Q8N-M12G5 | Without inscription label holder | – |
| | NEBU-M12G5-K-1-N-M12G3 | Without inscription label holder | – |
| Degree of protection | | IP65, IP68, IP69K | IP65, IP68 |
| Note on degree of protection | | In assembled state | – |

| Technical data – Electrical connection 1 | | | | | |
|---|---|---|---|---|---|
| Type | NEBU | | | | SIM |
| Function | Field device side | | | | Field device side |
| Design | Round | | | | Round |
| Connection type | Socket | | | | Socket |
| Cable outlet | Straight, angled | | | | Straight, angled |
| Connection technology | M12x1, A-coded to EN 61076-2-101 | | | | M12x1, A-coded |
| Number of pins/wires | 5 | | | | 5 |
| Assigned pins/wires | 2 | 3 | 4 | 5 | – |
| Type of mounting | Screw-type lock | | | | – |

# Data sheet

| Technical data – Electrical components | | | Without switching status indication | With switching status indication |
|---|---|---|---|---|
| Operating voltage range | Electrical connection 2<br>Plug M8, 3-pin | [V DC] | 0 ... 60 | 10 ... 30 |
| | | [V AC] | 0 ... 60 | – |
| | Electrical connection 2<br>Plug M8, 4-pin | [V DC] | 0 ... 30 | 10 ... 30 |
| | | [V AC] | 0 ... 30 | – |
| | Electrical connection 2<br>Plug M12, 3-pin | [V DC] | 0 ... 250 | 10 ... 30 |
| | | [V AC] | 0 ... 250 | – |
| | Electrical connection 2<br>Plug M12, 4-pin | [V DC] | 0 ... 250 | 10 ... 30 |
| | | [V AC] | 0 ... 250 | – |
| | Electrical connection 2<br>Plug M12, 5-pin | [V DC] | 0 ... 60 | – |
| | | [V AC] | 0 ... 60 | – |
| | Electrical connection 2<br>Open end, 3-wire | [V DC] | 0 ... 250 | 10 ... 30 |
| | | [V AC] | 0 ... 250 | – |
| | Electrical connection 2<br>Open end, 4-wire | [V DC] | 0 ... 250 | 10 ... 30 |
| | | [V AC] | 0 ... 250 | – |
| | Electrical connection 2<br>Open end, 5-wire | [V DC] | 0 ... 60 | – |
| | | [V AC] | 0 ... 60 | – |
| Surge resistance | Electrical connection 2<br>Plug M8, 3-pin | [kV] | 1.5 | 0.8 |
| | Electrical connection 2<br>Plug M8, 4-pin | [kV] | 0.8 | 0.8 |
| | Electrical connection 2<br>Plug M12, 3-pin | [kV] | 2.5 | 0.8 |
| | Electrical connection 2<br>Plug M12, 4-pin | [kV] | 2.5 | 0.8 |
| | Electrical connection 2<br>Plug M12, 5-pin | [kV] | 1.5 | – |
| | Electrical connection 2<br>Open end, 3-wire | [kV] | 2.5 | 0.8 |
| | Electrical connection 2<br>Open end, 4-wire | [kV] | 2.5 | 0.8 |
| | Electrical connection 2<br>Open end, 5-wire | [kV] | 1.5 | – |
| Current rating at 40°C | | [A] | 4 | 4 |
| | Electrical connection 2<br>Plug M8 | [A] | 3 | – |

# Data sheet

| Technical data – Cable | | | | | | | | | | | | |
|---|---|---|---|---|---|---|---|---|---|---|---|---|
| Type | | | | NEBU | | | | | SIM | | | |
| Cable characteristic | | Code -K- | | Standard | | | | | – | | | |
| | | Code -E- | | Suitable for energy chains | | | | | – | | | |
| | | Code -R- | | Suitable for robot applications | | | | | – | | | |
| | | | | – | | | | | Standard | | | |
| Cable testing conditions | | | | Bending strength: to Festo standard | | | | | Bending strength: to Festo standard | | | |
| | | | | Test conditions on request | | | | | Test conditions on request | | | |
| | Cable characteristic | Standard | | Energy chain: 5 million cycles, bending radius 75 mm | | | | | Energy chain: 5 million cycles, bending radius 75 mm | | | |
| | | Suitable for energy chains | | Energy chain: 5 million cycles, bending radius 28 mm | | | | | – | | | |
| | | | Code -Q8N- | Energy chain: 5 million cycles, bending radius 75 mm | | | | | – | | | |
| | | Suitable for robot applications | | Energy chain: 5 million cycles, bending radius 28 mm | | | | | – | | | |
| | | | | Torsional resistance more than 300000 cycles, ±270°/0.1 m | | | | | – | | | |
| Cable diameter | | | [mm] | 4.5 | | | | | 4.5 | | | |
| | | Code -Q8N- | [mm] | 7 | | | | | – | | | |
| Cable diameter tolerance | | | [mm] | ±0.1 | | | | | – | | | |
| Cable composition | | | [mm²] | – | 2x 0.25 | 3x 0.25 | 4x 0.25 | 5x 0.25 | 3x 0.25 | 4x 0.25 | 5x 0.25 | |
| | | Code -Q8N- | [mm²] | 5x 1 | – | – | – | – | – | – | – | |
| Conductor nominal cross section | | | [mm²] | – | 0.25 | 0.25 | 0.25 | 0.25 | 0.25 | 0.25 | 0.25 | |
| | | Code -Q8N- | [mm²] | 1 | – | – | – | – | – | – | – | |

| Technical data – Electrical connection 2 | | | | | | | | | | | | |
|---|---|---|---|---|---|---|---|---|---|---|---|---|
| Type | | NEBU | | | | | | | | SIM | | |
| Function | | Controller side | | | | | | | | | | |
| Connection type | | Cable | | | Plug | | Plug | | | Cable | | |
| Design | | – | | | Round | | Round | | | – | | |
| Cable outlet | | – | | | Straight, angled | | Straight, angled | | | – | | |
| Connection technology | | Open end | | | M8x1, A-coded to EN 61076-2-104 | | M12x1, A-coded to EN 61076-2-101 | | | Open end | | |
| Number of pins/wires | | 3 | 4 | 5 | 3 | 4 | 3 | 4 | 5 | 3 | 4 | 5 |
| Assigned pins/wires | Without switching status indication | 3 | 4 | 5 | 3 | 4 | 3 | 4 | 5 | – | – | – |
| | With switching status indication | 3 | 4 | – | 3 | 4 | 3 | 4 | – | – | – | – |
| Type of mounting | | – | – | – | Screw-type lock | | | | | – | – | – |

# Data sheet

| **Materials**<br>Type | NEBU | SIM |
|---|---|---|
| Housing | TPE-U(PUR) | TPE-U(PU) |
| Housing colour | Black | Black |
| Cable sheath | TPE-U(PUR) | TPE-U(PU) |
| Cable sheath colour | Grey | Grey |
| Insulating sheath | PP | PP |
| Wire insulation colour code | – | Blue, brown, black |
| | – | Blue, brown, black, white |
| | – | Blue, brown, grey, black, white |
| Screw-type lock | Nickel-plated brass | Nickel-plated brass |
| Note on materials | RoHS-compliant | RoHS-compliant |
| | Free of copper and PTFE | – |
| | Halogen-free | Halogen-free |
| | Free of phosphoric acid ester | Free of phosphoric acid ester |
| Special characteristics | Oil resistant | – |

| **Operating and environmental conditions** | | | NEBU | SIM |
|---|---|---|---|---|
| Ambient temperature | Cable characteristic: standard | [°C] | –25 ... +70 | –25 ... +80 |
| | Cable characteristic: suitable for energy chains, suitable for robot applications | [°C] | –25 ... +80 | – |
| Ambient temperature with flexible cable installation | Cable characteristic: standard | [°C] | –5 ... +70 | –5 ... +80 |
| | Cable characteristic: suitable for energy chains, suitable for robot applications | [°C] | –5 ... +80 | – |
| Corrosion resistance CRC[1)] | | | 2 | 2 |
| CE marking (see declaration of conformity)[2)] | Without switching status indication | | To EU Low-Voltage Directive | To EU Low-Voltage Directive |
| | With switching status indication | | – | – |
| | With plug M8, 4-pin | | – | – |
| | | | To EU RoHS Directive | To EU RoHS Directive |
| Pollution degree | | | 3 | 3 |

1) Corrosion resistance class CRC 2 to Festo standard FN 940070
Moderate corrosion stress. Indoor applications in which condensation can occur. External visible parts with primarily decorative surface requirements which are in direct contact with a normal industrial environment.

2) Additional information www.festo.com/sp → Certificates.

# Data sheet

**Circuitry (socket view)**

| Socket | Pin | Wire colour[1] | | | Pin | Plug | |
|---|---|---|---|---|---|---|---|
| **Electrical connection, socket, 5-pin, M12 – open cable end** | | | | | | **Open cable end** | |
| 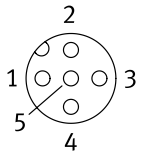 | | 3-wire | 4-wire | 5-wire | | – | |
| | 1 | BN | BN | BN | – | | |
| | 2 | – | WH | WH | – | | |
| | 3 | BU | BU | BU | – | | |
| | 4 | BK | BK | BK | – | | |
| | 5 | – | – | GY | – | | |
| **Electrical connection, socket, 5-pin, M12 – cable, 2-wire – plug, 4-pin** | | | | | | **Plug M8** | |
| 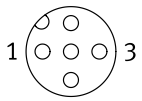 | 1 | BN | | | 1 | 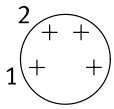 | |
| | 2 | – | | | – | | |
| | 3 | BU | | | 2 | | |
| | 4 | – | | | – | | |
| | 5 | – | | | – | | |
| **Electrical connection, socket, 5-pin, M12 – cable, 3-wire – plug, 3-pin/4-pin** | | | | | | **Plug M8** | **Plug M12** |
| 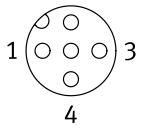 | 1 | BN | | | 1 | 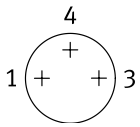 | 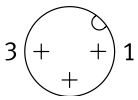 |
| | 2 | – | | | – | | |
| | 3 | BU | | | 3 | | |
| | 4 | BK | | | 4 | | |
| | 5 | – | | | – | 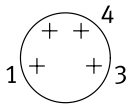 | |
| **Electrical connection, socket, 5-pin, M12 – plug, 4-pin** | | | | | | **Plug M8** | **Plug M12** |
| 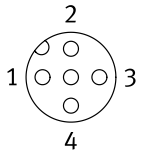 | 1 | BN | | | 1 | 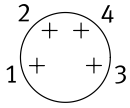 | 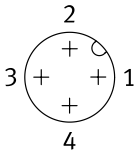 |
| | 2 | WH | | | 2 | | |
| | 3 | BU | | | 3 | | |
| | 4 | BK | | | 4 | | |
| | 5 | – | | | – | | |
| **Electrical connection, socket, 5-pin, M12 – plug, 5-pin** | | | | | | | **Plug M12** |
| 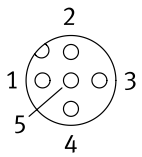 | 1 | BN | | | 1 | | 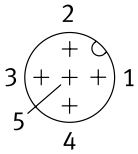 |
| | 2 | WH | | | 2 | | |
| | 3 | BU | | | 3 | | |
| | 4 | BK | | | 4 | | |
| | 5 | GY | | | 5 | | |

1) To IEC 757

**Circuitry, switching status indication**

Display of code -P-

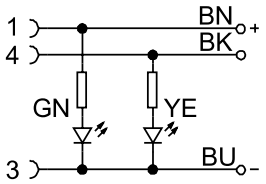


Display of code N

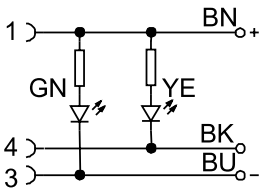


Display of code -P2

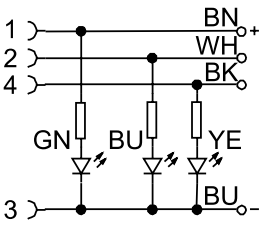

# Data sheet

**Dimensions** Download CAD data ➔ www.festo.com

Connection technology, left

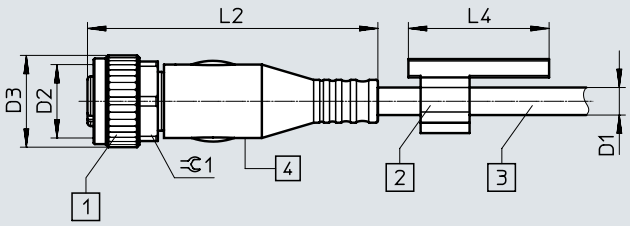


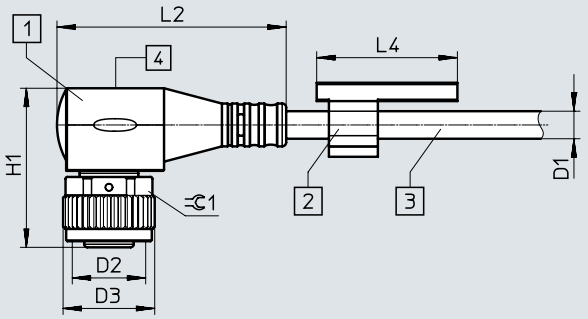


Connection technology, right

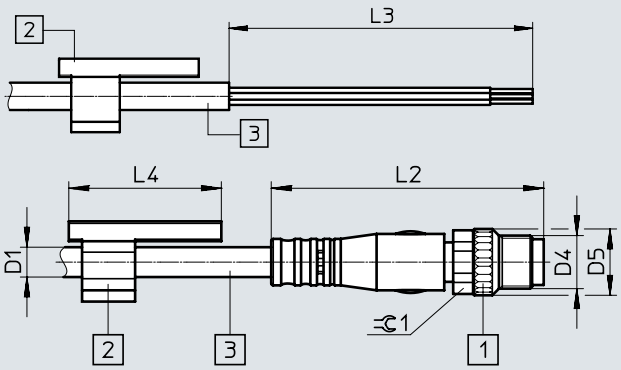


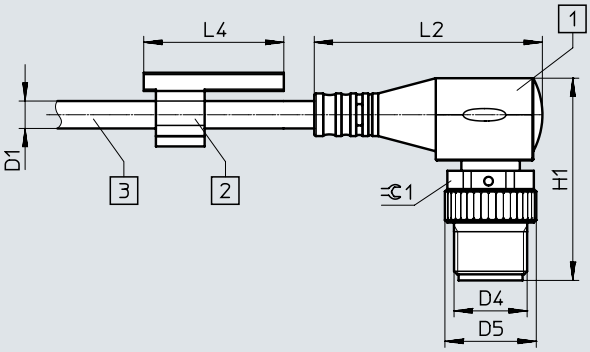


[1] Socket M12x1
[2] Inscription label holder
[3] Cable, length 0.1 ... 30 m depending on the order
[4] Display field with version P, N or P2

| Connection technology, left | D1 ⌀ | D2 | D3 ⌀ | L2 | L4 | H1 | ⊂⊃1 |
|---|---|---|---|---|---|---|---|
| **NEBU** | | | | | | | |
| Straight socket | 4.5 | M12x1 | 15 | 47.5 | 23 | – | 13 |
| Angled socket | 4.5 | M12x1 | 15 | 37.5 | 23 | 26 | 13 |
| **NEBU with display** | | | | | | | |
| Angled socket | 4.5 | M12x1 | 15 | 37.5 | 23 | 26 | 13 |
| **NEBU-M12G5-...-Q8N-M12G5** | | | | | | | |
| Straight socket | 7 | M12x1 | 15 | 47.5 | – | – | 13 |
| **SIM** | | | | | | | |
| Straight socket | 4.5 | M12x1 | 15 | 47.5 | – | – | 13 |
| Angled socket | 4.5 | M12x1 | 15 | 37.5 | – | 26 | 13 |

| Connection technology, right | D1 ⌀ | D4 | D5 ⌀ | L2 | L3 | L4 | H1 | ⊂⊃1 |
|---|---|---|---|---|---|---|---|---|
| **NEBU** | | | | | | | | |
| Open end | 4.5 | – | – | – | 50 | 23 | – | – |
| Straight plug | 4.5 | M8x1 | 10 | 41.1 | – | 23 | – | 9 |
| | 4.5 | M12x1 | 15 | 54.5 | – | 23 | – | 13 |
| Angled plug | 4.5 | M8x1 | 10 | 26.9 | – | 23 | 24 | 9 |
| | 4.5 | M12x1 | 15 | 37.5 | – | 23 | 33.2 | 13 |
| **NEBU with display** | | | | | | | | |
| Open end | 4.5 | – | – | – | 50 | 23 | – | – |
| Straight plug | 4.5 | M8x1 | 10 | 41.1 | – | 23 | – | 9 |
| | 4.5 | M12x1 | 15 | 54.5 | – | 23 | – | 13 |
| Angled plug | 4.5 | M8x1 | 10 | 26.9 | – | 23 | 24 | 9 |
| | 4.5 | M12x1 | 15 | 37.5 | – | 23 | 33.2 | 13 |
| **NEBU-M12G5-...-Q8N-M12G5** | | | | | | | | |
| Straight plug | 7 | M12x1 | 15 | 54.5 | – | – | – | 13 |
| **SIM** | | | | | | | | |
| Open end | 4.5 | – | – | – | 50 | – | – | – |

# Data sheet

| Ordering data | Cable characteristic | Cable length [m] | Outlet direction | Special features | Product weight [g] | Part no. | Type |
|---|---|---|---|---|---|---|---|
| **Socket, 5-pin, M12 – open cable end, 3-wire** | | | | | | | |
| 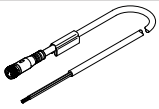 | Standard | 2.5 | Straight | – | 69 | ★ **541363** | **NEBU-M12G5-K-2.5-LE3** |
| | | | | | – | **159428** | **SIM-M12-3GD-2,5-PU** |
| | | | | Switching status indication, for PNP N/O contact | 70 | **541366** | **NEBU-M12W5P-K-2.5-LE3** |
| | | | Angled | – | 70 | **541367** | **NEBU-M12W5-K-2.5-LE3** |
| | | | | | – | **159430** | **SIM-M12-3WD-2,5-PU** |
| | | | | Switching status indication, for NPN N/O contact | 70 | **541365** | **NEBU-M12W5N-K-2.5-LE3** |
| | | | | For PNP N/O contact, switching status indication yellow, ready status indication green | – | **159432** | **SIM-M12-3WD-2.5-PSL-PU** |
| | | 5 | Straight | – | 128 | ★ **541364** | **NEBU-M12G5-K-5-LE3** |
| | | | | | – | **159429** | **SIM-M12-3GD-5-PU** |
| | | | Angled | – | 129 | **541370** | **NEBU-M12W5-K-5-LE3** |
| | | | | | – | **159431** | **SIM-M12-3WD-5-PU** |
| | | | | Switching status indication, for NPN N/O contact | 130 | **541368** | **NEBU-M12W5N-K-5-LE3** |
| | | | | Switching status indication, for PNP N/O contact | 130 | **541369** | **NEBU-M12W5P-K-5-LE3** |
| | | | | For PNP N/O contact, switching status indication yellow, ready status indication green | – | **159433** | **SIM-M12-3WD-5-PSL-PU** |
| **Socket, 5-pin, M12 – open cable end, 4-wire** | | | | | | | |
| 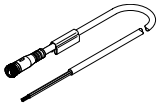 | Standard | 2.5 | Straight | – | 77 | ★ **550326** | **NEBU-M12G5-K-2.5-LE4** |
| | | | Angled | – | 78 | **550325** | **NEBU-M12W5-K-2.5-LE4** |
| | | 5 | Straight | – | 143 | ★ **541328** | **NEBU-M12G5-K-5-LE4** |
| | | | | | – | **164259** | **SIM-M12-4GD-5-PU** |
| | | | Angled | – | 144 | **541329** | **NEBU-M12W5-K-5-LE4** |
| | | | | | – | **164258** | **SIM-M12-4WD-5-PU** |
| | | 7 | Straight | – | 197 | **8003134** | **NEBU-M12G5-K-7-LE4** |
| | | 10 | Angled | – | 278 | **569841** | **NEBU-M12W5-K-10-LE4** |
| **Socket, 5-pin, M12 – open cable end, 5-wire** | | | | | | | |
| 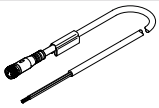 | Standard | 2.5 | Straight | – | 78 | **541330** | **NEBU-M12G5-K-2.5-LE5** |
| | | | | | – | **175715** | **SIM-M12-5GD-2,5-PU** |
| | | | Angled | – | 79 | **567843** | **NEBU-M12W5-K-2.5-LE5** |
| | | 5 | Straight | – | 146 | **541331** | **NEBU-M12G5-K-5-LE5** |
| | | | | | – | **175716** | **SIM-M12-5GD-5-PU** |
| | | | Angled | – | 147 | **567844** | **NEBU-M12W5-K-5-LE5** |
| | | 10 | Straight | – | 283 | **554038** | **NEBU-M12G5-K-10-LE5** |

| | | |
|---|---|---|
| Festo core product range | ★ | Generally ready for dispatch from the factory within 24 hours |
| | ☆ | Generally ready for dispatch from the factory within 5 days |

# Data sheet

| Ordering data | Cable characteristic | Cable length [m] | Outlet direction | Special features | Product weight [g] | Part no. | Type |
|---|---|---|---|---|---|---|---|
| **Socket, 5-pin, M12 – plug, 4-pin, M8** | | | | | | | |
| 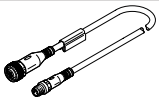 | Standard | 2.5 | Straight – straight | – | 81 | **554036** | **NEBU-M12G5-K-2.5-M8G4** |
| | Suitable for use with energy chains | | Straight – straight | Cable, 2-wire | 74 | **554034** | **NEBU-M12G5-E-2.5-W2-M8G4-V1** |
| | | | | Cable, 3-wire | 74 | **554033** | **NEBU-M12G5-E-2.5-W3-M8G4-V2** |
| **Socket, 5-pin, M12 – plug, 3-pin, M12** | | | | | | | |
| 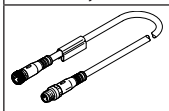 | Standard | 1 | Straight – straight | Without inscription label holder | 44 | **8091511** | **NEBU-M12G5-K-1-N-M12G3** |
| **Socket, 5-pin, M12 – plug, 4-pin, M12** | | | | | | | |
| 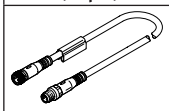 | Standard | 0.5 | Straight – straight | – | 36 | **8000208** | **NEBU-M12G5-K-0.5-M12G4** |
| **Socket, 5-pin, M12 – plug, 5-pin, M12** | | | | | | | |
| 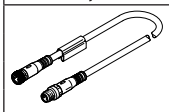 | Standard | 0.5 | Straight – angled | – | 37 | **8003617** | **NEBU-M12G5-K-0.5-M12W5** |
| | | | Angled – angled | – | 38 | **570733** | **NEBU-M12W5-K-0.5-M12W5** |
| | | 2 | Straight – angled | – | 77 | **8003618** | **NEBU-M12G5-K-2-M12W5** |
| | | | Angled – angled | – | 78 | **570734** | **NEBU-M12W5-K-2-M12W5** |
| | Suitable for use with energy chains | 5 | Straight – straight | Conductor nominal cross section 1 $mm^2$ | 158 | **574321** | **NEBU-M12G5-E-5-Q8N-M12G5** |
| | | 7.5 | Straight – straight | Conductor nominal cross section 1 $mm^2$ | 227 | **574322** | **NEBU-M12G5-E-7.5-Q8N-M12G5** |
| | | 10 | Straight – straight | Conductor nominal cross section 1 $mm^2$ | 295 | **574323** | **NEBU-M12G5-E-10-Q8N-M12G5** |

| Ordering data – Accessories | Designation | Part no. | Type |
|---|---|---|---|
| **Plugs** | | | |
| 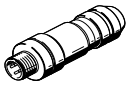 | Plugs for self-assembly | – | ➔ Internet: necu |
| | | – | ➔ Internet: sea |
| **Inscription labels** | | | |
| 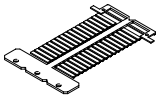 | Inscription labels 23 mm for holder, 34 pieces, in frame | **541598** | **ASLR-L-423** |
| **Safety clip** | | | |
|  | Prevents the screw-type lock from being released easily (without a tool), to be fastened securely to the cable | For M8 | **548067** | **NEAU-M8-GD** |
| | | For M12 | **548068** | **NEAU-M12-GD** |

# Data sheet

**Plug socket with cable**
**NEBU-M12**
**SIM-M12-8**
**KM12-8**

- Pre-assembled at one end, pre-assembled at both ends
- Cable lengths 2 m, 5 m, 10 m, 15 m, 20 m and 25 m
- 8 wires
- M12x1 socket, 8-pin

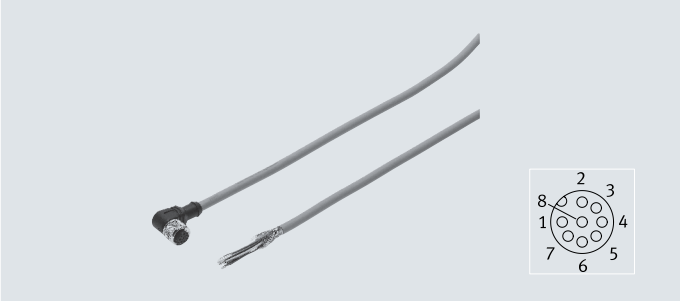


| General technical data | | | |
|---|---|---|---|
| Type | NEBU | SIM | KM12 |
| Conforms to standard | EN 61076-2-101 | EN 61076-2-101 | – |
| | – | DIN 47100 | – |
| Cable designation | Without inscription label holder | Without inscription label holder | Without inscription label holder |
| Degree of protection | IP67 | IP67 | IP67 |
| Note on degree of protection | In assembled state | In assembled state | In assembled state |

| Technical data – Electrical connection 1 | | | |
|---|---|---|---|
| Type | NEBU | SIM | KM12 |
| Function | Field device side | | |
| Design | Round | | |
| Connection type | Socket | | |
| Cable outlet | Angled | Straight | Straight |
| Connection technology | M12x1, A-coded to EN 61076-2-101 | | |
| Number of pins/wires | 8 | | |
| Assigned pins/wires | 8 | | |
| Type of mounting | Screw-type lock | | |
| Connection frequency | – | – | 50 |

| Technical data – Electrical components | | | | |
|---|---|---|---|---|
| Type | | NEBU | SIM | KM12 |
| Nominal operating voltage | [V DC] | – | – | 30 |
| Operating voltage range | [V DC] | 0 ... 30 | 0 ... 30 | 0 ... 30 |
| | [V AC] | 0 ... 30 | 0 ... 30 | 0 ... 30 |
| Surge resistance | [kV] | 0.8 | 0.8 | 0.8 |
| Current rating at 40°C | [A] | 2 | 2 | 2 |

| Technical data – Cable | | | | | |
|---|---|---|---|---|---|
| Type | | | NEBU | SIM | KM12 |
| Cable characteristic | | | Standard | Standard | Standard |
| | | | – | – | Test conditions on request |
| Bending radius | Fixed cable installation | [mm] | ≥32 | ≥32 | ≥32 |
| | Flexible cable installation | [mm] | ≥66 | ≥66 | ≥64 |
| Cable diameter | | [mm] | 6.3 | 6.3 | 6.2 |
| Cable diameter tolerance | | [mm] | ±0.2 | ±0.2 | ±0.2 |
| Cable composition | | [mm²] | 8x 0.25 | | |
| | | | Shielded | | |
| Conductor nominal cross section | | [mm²] | 0.25 | | |

# Data sheet

| Technical data – Electrical connection 2 | | | |
|---|---|---|---|
| Type | NEBU | SIM | KM12 |
| Function | Controller side | | |
| Connection type | Cable | Cable | Plug |
| Design | – | – | Round |
| Cable outlet | – | – | Straight |
| Connection technology | Open end | Open end | M12x1, A-coded to EN 61076-2-101 |
| Number of pins/wires | 8 | 8 | 8 |
| Assigned pins/wires | 8 | 8 | 8 |
| Wire ends | Tin-plated | Tin-plated | |
| Type of mounting | – | – | Screw-type lock |

| Materials | | | |
|---|---|---|---|
| Type | NEBU | SIM | KM12 |
| Housing | TPE-U(PUR) | TPE-U(PUR) | – |
| Housing colour | – | – | – |
| Cable sheath | TPE-U(PUR) | TPE-U(PUR) | TPE-U(PUR) |
| Cable sheath colour | Grey | Grey | Grey |
| Insulating sheath | PP | PP | PP |
| | – | – | TPE-U(PUR) |
| Screw-type lock | – | Nickel-plated brass | Nickel-plated brass |
| | – | – | Chrome-plated brass |
| Union nut | Nickel-plated brass | – | – |
| Seals | NBR | – | NBR |
| Pin contacts | Gold-plated brass | Gold-plated bronze | Nickel-plated and gold-plated brass |
| Note on materials | RoHS-compliant | RoHS-compliant | RoHS-compliant |

| Operating and environmental conditions | | | | | |
|---|---|---|---|---|---|
| Type | | | NEBU | SIM | KM12 |
| Ambient temperature | | [°C] | –25 ... +80 | –25 ... +80 | –25 ... +80 |
| | With flexible cable installation | [°C] | –5 ... +80 | –5 ... +80 | 0 ... +80 |
| Corrosion resistance CRC[1] | | | 2 | 2 | 2 |
| CE marking (see declaration of conformity)[2] | | | To EU EMC Directive | To EU EMC Directive | To EU EMC Directive |
| Pollution degree | | | 3 | 3 | 3 |

1) Corrosion resistance class CRC 2 to Festo standard FN 940070
Moderate corrosion stress. Indoor applications in which condensation can occur. External visible parts with primarily decorative surface requirements which are in direct contact with a normal industrial environment.
2) Additional information www.festo.com/sp → Certificates.

# Data sheet

| **Circuitry (socket view)** | | | | |
|---|---|---|---|---|
| Socket | Pin | Wire colour[1] | Pin | Plug |
| **Electrical connection, socket, 8-pin, M12 – open cable end** | | | | |
| 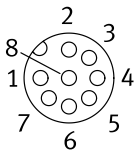 | 1 | WH | – | – |
| | 2 | BN | – | |
| | 3 | GN | – | |
| | 4 | YE | – | |
| | 5 | GY | – | |
| | 6 | RS | – | |
| | 7 | BU | – | |
| | 8 | RD | – | |
| **Electrical connection, socket, 8-pin, M12 – plug, 8-pin** | | | | |
| 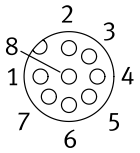 | 1 | WH | 1 | 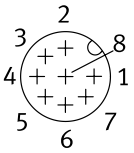 |
| | 2 | BN | 2 | |
| | 3 | GN | 3 | |
| | 4 | YE | 4 | |
| | 5 | GY | 5 | |
| | 6 | RS | 6 | |
| | 7 | BU | 7 | |
| | 8 | RD | 8 | |
| | Housing | Shielding | Housing | |

1) To IEC 757

# Data sheet

**Dimensions** Download CAD data ➔ www.festo.com

Connection technology, left

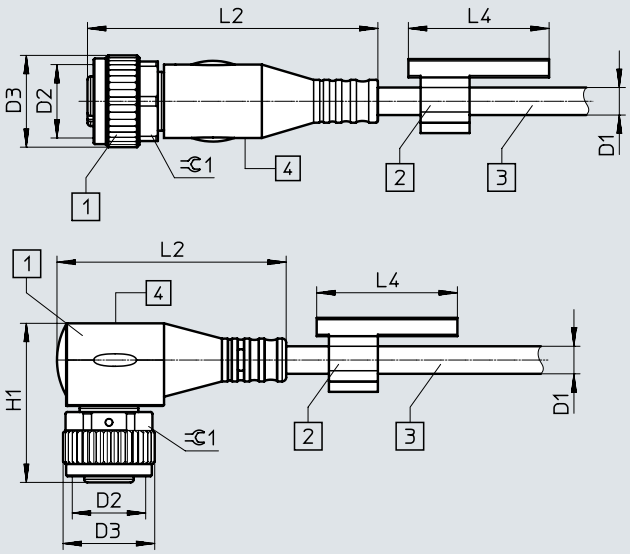


Connection technology, right

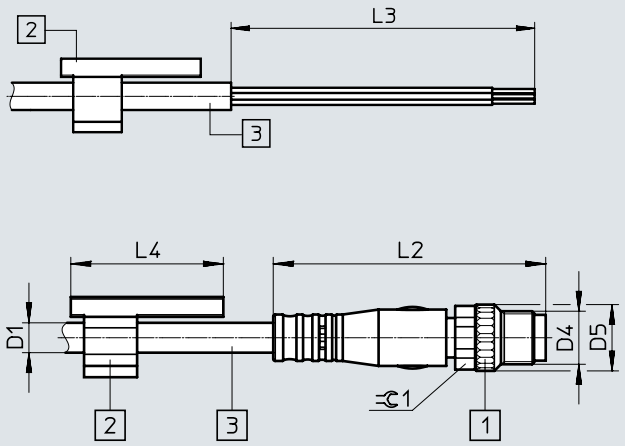


[1] Socket M12x1

[2] Inscription label holder, must be ordered separately as an accessory

[3] Cable, length 2 m, 5 m, 10 m, 15 m, 20 m, 25 m depending on the order

| Connection technology, left | D1 ø | D2 | D3 ø | L2 | L4 | H1 | ⌯1 |
|---|---|---|---|---|---|---|---|
| **NEBU** | | | | | | | |
| Angled socket | 6.3 | M12x1 | 14.5 | 33.5 | – | 26.2 | – |
| **SIM** | | | | | | | |
| Straight socket | 6.2 | M12x1 | 14.5 | – | – | – | – |
| **KM12** | | | | | | | |
| Straight socket | 6.2 | M12x1 | – | – | – | – | – |

| Connection technology, right | D1 ø | D4 | D5 ø | L2 | L3 | L4 | ⌯1 |
|---|---|---|---|---|---|---|---|
| **NEBU** | | | | | | | |
| Open end | 6.3 | – | – | – | 70 | – | – |
| **SIM** | | | | | | | |
| Open end | 6.2 | – | – | – | 70 | – | – |
| **KM12** | | | | | | | |
| Straight plug | 6.2 | M12x1 | 14.6 | – | – | – | – |

# Data sheet

| Ordering data | Cable characteristic | Cable length [m] | Outlet direction | Special features | Product weight [g] | Part no. | Type |
|---|---|---|---|---|---|---|---|
| **Socket, 8-pin, M12 – open cable end, 8-wire** | | | | | | | |
| 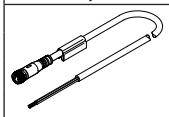 | Standard | 2 | Angled | – | 125 | **542256** | **NEBU-M12W8-K-2-N-LE8** |
| | | | Straight | – | – | **525616** | **SIM-M12-8GD-2-PU** |
| | | 5 | Angled | – | 292 | **542257** | **NEBU-M12W8-K-5-N-LE8** |
| | | | Straight | – | 343 | **525618** | **SIM-M12-8GD-5-PU** |
| | | 10 | Angled | – | 570 | **570007** | **NEBU-M12W8-K-10-N-LE8** |
| | | | Straight | – | – | **570008** | **SIM-M12-8GD-10-PU** |
| | | 15 | Angled | – | 848 | **8048086** | **NEBU-M12W8-K-15-N-LE8** |
| | | | Straight | – | – | **5105631** | **SIM-M12-8GD-15-PU** |
| | | 20 | Straight | – | – | **5105632** | **SIM-M12-8GD-20-PU** |
| | | 25 | Straight | – | – | **5105633** | **SIM-M12-8GD-25-PU** |
| **Socket, 8-pin, plug M12, 8-pin, M12** | | | | | | | |
| 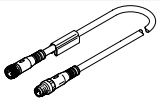 | – | 2 | Straight – straight | – | 140 | **525617** | **KM12-8GD8GS-2-PU** |

# Data sheet

**Power supply socket**
**NEBU-G78W5**

- Connecting cable for power supply
- Pre-assembled at one end
- 2 m cable length
- 5 wires
- Socket G7/8, 5-pin

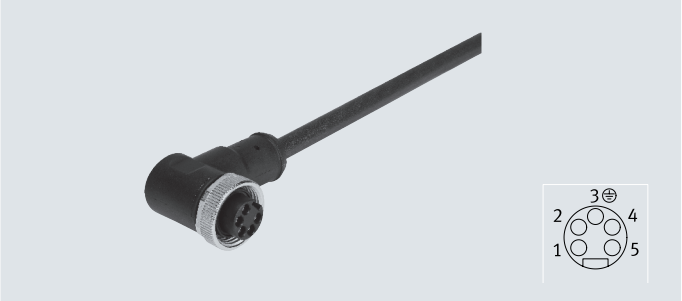


| General technical data | |
|---|---|
| Based on standard | NFPA/T3.5.29 R1-2007 |
| Cable designation | Without inscription label holder |
| Degree of protection | IP65, IP67 |
| Note on degree of protection | In assembled state |

| Technical data – Electrical connection 1 | |
|---|---|
| Function | Field device side |
| Design | Round |
| Connection type | Socket |
| Cable outlet | Angled |
| Connection technology | G7/8 coded to NFPA/T3.5.29 R1-2007 |
| Number of pins/wires | 5 |
| Assigned pins/wires | 5 |
| Type of mounting | Screw-type lock |
| Contact durability | 100 |

| Technical data – Electrical components | | |
|---|---|---|
| Operating voltage range | [V DC] | 0 ... 300 |
| | [V AC] | 0 ... 300 |
| Surge resistance | [kV] | 4 |
| Current rating at 40°C | [A] | 9 |

| Technical data – Cable | | |
|---|---|---|
| Cable characteristic | | Standard |
| Cable testing conditions | | Test conditions on request |
| Bending radius, fixed cable installation | [mm] | ≥65 |
| Cable diameter | [mm] | 8.7 |
| Cable diameter tolerance | [mm] | ±0.2 |
| Cable composition | [$mm^2$] | 5x 1.5 |
| Conductor nominal cross section | [$mm^2$] | 1.5 |

| Technical data – Electrical connection 2 | |
|---|---|
| Function | Controller side |
| Connection type | Cable |
| Connection technology | Open end |
| Number of pins/wires | 5 |
| Assigned pins/wires | 5 |

# Data sheet

| Materials | |
|---|---|
| Housing | TPE-U(PUR) |
| Housing colour | Black |
| Cable sheath | TPE-U(PUR) |
| Cable sheath colour | Black |
| Screw-type lock | Nickel-plated brass |
| Pin contacts | Gold-plated brass |
| Note on materials | RoHS-compliant |

| Operating and environmental conditions | | |
|---|---|---|
| Ambient temperature | [°C] | –20 ... +80 |
| Corrosion resistance CRC[1)] | | 1 |
| CE marking (see declaration of conformity)[2)] | | To EU Low-Voltage Directive |
| Pollution degree | | 3 |

1) Corrosion resistance class CRC 1 to Festo standard FN 940070
Low corrosion stress. Dry internal application or transport and storage protection. Also applies to parts behind coverings, in the non-visible interior area, and parts which are covered in the application (e.g. drive trunnions).
2) Additional information www.festo.com/sp ➔ Certificates.

**Circuitry (socket view)**

| Socket | Pin | Wire colour[1)] | Pin | Plug |
|---|---|---|---|---|
| **Electrical connection, socket, 5-pin, G7/8 – open cable end** | | | | |
| 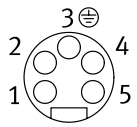 | 1 | BK | – | – |
| | 2 | BU | – | |
| | 3 | GN YE | – | |
| | 4 | BN | – | |
| | 5 | WH | – | |



1) To IEC 757

**Dimensions** Download CAD data ➔ www.festo.com

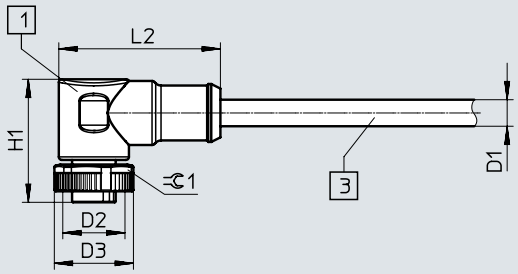


[1] Socket G7/8
[3] Cable, length 2 m

| | D1 ⌀ | D2 | D3 ⌀ | L2 | H1 | =C1 |
|---|---|---|---|---|---|---|
| NEBU-G78W5 | 8.7 | 7/8" | 26 | 53 | 40.4 | 24 |

**Ordering data**

| | Cable characteristic | Cable length [m] | Outlet direction | Special features | Product weight [g] | Part no. | Type |
|---|---|---|---|---|---|---|---|
| **Socket, 5-pin, G7/8 – open cable end** | | | | | | | |
| 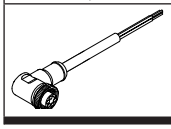 | Standard | 2 | Angled | – | 300 | **573855** | **NEBU-G78W5-K-2-N-LE5** |

# Data sheet

**Connecting cable**
**SIM-K**

- Connecting cable for low-voltage applications
- Easy-to-clean design
- Pre-assembled at one end
- Cable lengths 2.5 m, 5 m and 10 m
- 3 wires
- Mounting via clip (snap-locking)


| General technical data | |
|---|---|
| Conforms to standard | EN 61076-2-104 |
| | EN 61984 |
| | Wire colours and connection numbers to EN 60947-5-2 |
| Cable designation | Without inscription label holder |
| Degree of protection | IP65, IP67 |
| Note on degree of protection | In assembled state |

| Technical data – Electrical connection 1 | |
|---|---|
| Function | Field device side |
| Design | Round |
| Connection type | Socket |
| Cable outlet | Straight, angled |
| Connection technology | M8 snap-locking A-coded to EN 61076-2-104 |
| Number of pins/wires | 3 |
| Assigned pins/wires | 3 |
| Type of mounting | Snap-locking |
| Contact durability | 100 |

| Technical data – Electrical components | | |
|---|---|---|
| Operating voltage range | [V DC] | 0 ... 60 |
| | [V AC] | 0 ... 60 |
| Surge resistance | [kV] | 1.5 |
| Current rating at 40°C | [A] | 3 |

| Technical data – Cable | | | |
|---|---|---|---|
| Cable characteristic | | | Standard |
| Cable testing conditions | | | Bending strength: to Festo standard |
| | | | Test conditions on request |
| | | | Energy chain: 5 million cycles, bending radius 28 mm |
| Bending radius | Fixed cable installation | [mm] | ≥23 |
| | Flexible cable installation | [mm] | ≥46 |
| Cable diameter | | [mm] | 4.5 |
| Cable diameter tolerance | | [mm] | ±0.1 |
| Cable composition | | [mm²] | 3x 0.25 |
| Conductor nominal cross section | | [mm²] | 0.25 |

| Technical data – Electrical connection 2 | |
|---|---|
| Function | Controller side |
| Connection type | Cable |
| Connection technology | Open end |
| Number of pins/wires | 3 |
| Assigned pins/wires | 3 |
| Wire ends | Wire end sleeve |

# Data sheet

| Materials | |
|---|---|
| Housing | TPE-U(PUR) |
| Housing colour | Black |
| Cable sheath | TPE-U(PUR) |
| Cable sheath colour | Grey |
| Insulating sheath | PP |
| Seals | NBR |
| Pin contacts | Gold-plated brass |
| Note on materials | RoHS-compliant |
| | Free of copper and PTFE |
| | Halogen-free |

| Operating and environmental conditions | | | |
|---|---|---|---|
| Ambient temperature | | [°C] | –25 ... +70 |
| | With flexible cable installation | [°C] | –5 ... +70 |
| Storage temperature | | [°C] | –25 ... +70 |
| Corrosion resistance CRC[1] | | | 4 |
| CE marking (see declaration of conformity)[2] | | | To EU Low-Voltage Directive |
| Pollution degree | | | 3 |

1) Corrosion resistance class CRC 4 to Festo standard FN 940070
Particularly high corrosion stress. Outdoor exposure under extreme corrosive conditions. Parts exposed to aggressive media, e.g. in the chemical or food industries. Such applications may need to be safeguarded by special tests (➔ also FN 940082), using appropriate media.
2) Additional information www.festo.com/sp ➔ Certificates.

**Circuitry (socket view)**

| Socket | Pin | Wire colour[1] | Pin | Plug |
|---|---|---|---|---|
| **Electrical connection, socket, 3-pin, clip – open cable end** | | | | |
| 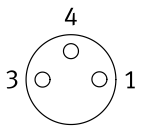  | 1 | BN | – | – |
| | 3 | BU | – | |
| | 4 | BK | – | |

1) To IEC 757

# Data sheet

**Dimensions** Download CAD data ➔ www.festo.com

Connection technology, left

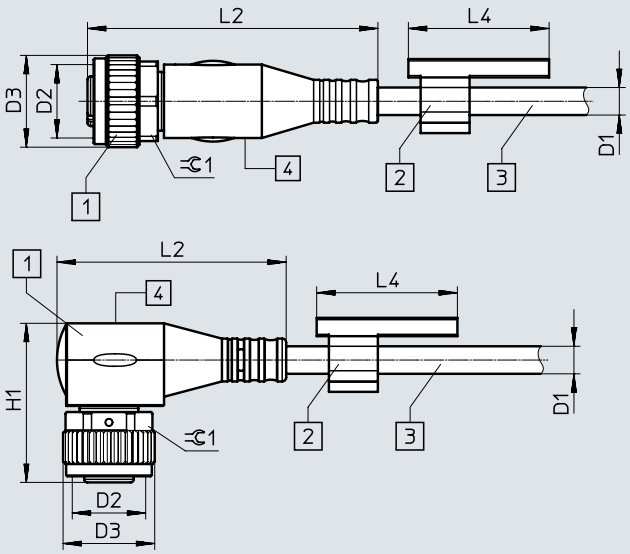


Connection technology, right

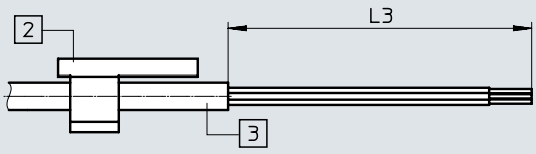


[1] Socket

[2] Inscription label holder, must be ordered separately as an accessory

[3] Cable, length 2.5 m, 5 m, 10 m depending on the order

| Connection technology, left | D1 ⌀ | D2 | D3 ⌀ | L2 | L4 | H1 | ⊂⊃1 |
|---|---|---|---|---|---|---|---|
| Straight socket | 4.5 | – | 8.5 | 33.6 | – | – | – |
| Angled socket | 4.5 | 8.3 | 8.5 | 26.1 | – | 18.4 | – |

| Connection technology, right | D1 ⌀ | L3 |
|---|---|---|
| Open end | 4.5 | 50 |

**Ordering data**

| | Cable characteristic | Cable length [m] | Outlet direction | Special features | Product weight [m] | Part no. | Type |
|---|---|---|---|---|---|---|---|
| **Socket, 3-pin, clip – open cable end** | | | | | | | |
| 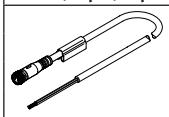 | Standard | 2.5 | Straight | – | – | **164257** | **SIM-K-GD-2,5-PU** |
| | | | Angled | – | – | **164255** | **SIM-K-WD-2,5-PU** |
| | | 5 | Straight | – | – | **164256** | **SIM-K-GD-5-PU** |
| | | | Angled | – | – | **164254** | **SIM-K-WD-5-PU** |
| | | 10 | Straight | – | – | **192962** | **SIM-K-GD-10-PU** |
| | | | Angled | – | – | **192963** | **SIM-K-WD-10-PU** |

# Data sheet

**Connecting cable**
**SIM-K**

- Connecting cable for low-voltage applications
- Easy-to-clean design
- Pre-assembled at one end
- Cable lengths 2.5 m and 5 m
- 4 wires
- Mounting via clip (snap-locking)

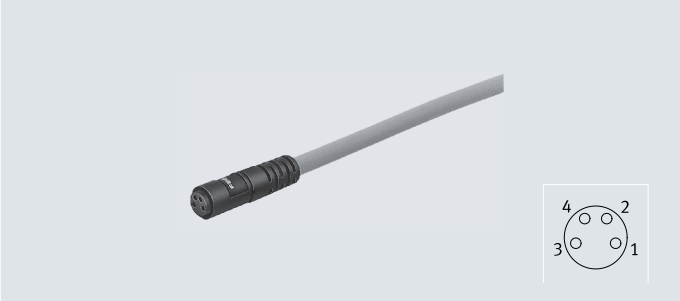


| General technical data | |
|---|---|
| Conforms to standard | EN 61076-2-104 |
| | EN 61984 |
| | Wire colours and connection numbers to EN 60947-5-2 |
| Cable designation | Without inscription label holder |
| Degree of protection | IP65, IP67 |
| Note on degree of protection | In assembled state |

| Technical data – Electrical connection 1 | |
|---|---|
| Function | Field device side |
| Design | Round |
| Connection type | Socket |
| Cable outlet | Straight, angled |
| Connection technology | M8 snap-locking A-coded to EN 61076-2-104 |
| Number of pins/wires | 4 |
| Assigned pins/wires | 4 |
| Type of mounting | Snap-locking |
| Contact durability | 100 |

| Technical data – Electrical components | | |
|---|---|---|
| Operating voltage range | [V DC] | 0 ... 30 |
| | [V AC] | 0 ... 30 |
| Surge resistance | [kV] | 0.8 |
| Current rating at 40°C | [A] | 3 |

| Technical data – Cable | | | |
|---|---|---|---|
| Cable characteristic | | | Standard |
| Cable testing conditions | | | Bending strength: to Festo standard |
| | | | Test conditions on request |
| | | | Energy chain: 5 million cycles, bending radius 28 mm |
| Bending radius | Fixed cable installation | [mm] | ≥23 |
| | Flexible cable installation | [mm] | ≥46 |
| Cable diameter | | [mm] | 4.5 |
| Cable diameter tolerance | | [mm] | ±0.1 |
| Cable composition | | [mm²] | 4x 0.25 |
| Conductor nominal cross section | | [mm²] | 0.25 |

| Technical data – Electrical connection 2 | |
|---|---|
| Function | Controller side |
| Connection type | Cable |
| Connection technology | Open end |
| Number of pins/wires | 4 |
| Assigned pins/wires | 4 |
| Wire ends | Wire end sleeve |

# Data sheet

| Materials | |
|---|---|
| Housing | TPE-U(PUR) |
| Housing colour | Black |
| Cable sheath | TPE-U(PUR) |
| Cable sheath colour | Grey |
| Insulating sheath | PP |
| Seals | NBR |
| Pin contacts | Gold-plated brass |
| Note on materials | RoHS-compliant |
| | Free of copper and PTFE |
| | Halogen-free |

| Operating and environmental conditions | | | |
|---|---|---|---|
| Ambient temperature | | [°C] | –25 ... +70 |
| | With flexible cable installation | [°C] | –5 ... +70 |
| Storage temperature | | [°C] | –25 ... +70 |
| Corrosion resistance CRC[1)] | | | 4 |
| Pollution degree | | | 3 |

1) Corrosion resistance class CRC 4 to Festo standard FN 940070
Particularly high corrosion stress. Outdoor exposure under extreme corrosive conditions. Parts exposed to aggressive media, e.g. in the chemical or food industries. Such applications may need to be safeguarded by special tests (➔ also FN 940082), using appropriate media.

**Circuitry (socket view)**

| Socket | Pin | Wire colour[1)] | Pin | Plug |
|---|---|---|---|---|
| **Electrical connection, socket, 4-pin, clip – open cable end** | | | | |
| 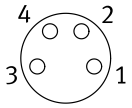  | 1 | BN | – | – |
| | 2 | WH | – | |
| | 3 | BU | – | |
| | 4 | BK | – | |

1) To IEC 757

# Data sheet

**Dimensions** Download CAD data ➔ www.festo.com

Connection technology, left

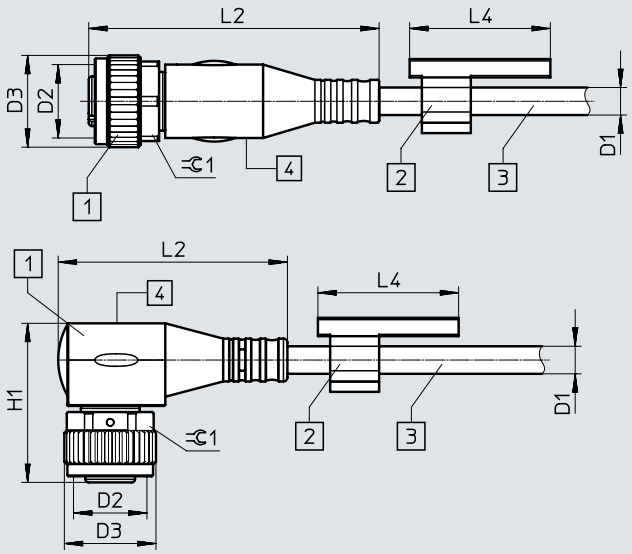


Connection technology, right

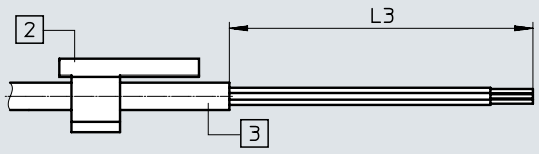


[1] Socket
[2] Inscription label holder, must be ordered separately as an accessory
[3] Cable, length 2.5 m, 5 m depending on the order

| Connection technology, left | D1 ø | D2 | D3 ø | L2 | L4 | H1 | ⌯1 |
|---|---|---|---|---|---|---|---|
| Straight socket | 4.5 | – | 8.5 | 33.6 | – | – | – |
| Angled socket | 4.5 | – | 8.3 | 26.1 | – | 18.4 | – |

| Connection technology, right | D1 ø | L3 |
|---|---|---|
| Open end | 4.5 | 50 |

**Ordering data**

| | Cable characteristic | Cable length [m] | Outlet direction | Special features | Product weight [g] | Part no. | Type |
|---|---|---|---|---|---|---|---|
| **Socket, 4-pin, clip – open cable end** | | | | | | | |
| 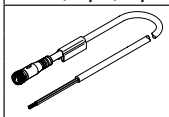 | Standard | 2.5 | Straight | – | – | **164250** | **SIM-K-4-GD-2,5-PU** |
| | | | Angled | – | – | **164252** | **SIM-K-4-WD-2,5-PU** |
| | | 5 | Straight | – | – | **164251** | **SIM-K-4-GD-5-PU** |
| | | | Angled | – | – | **164253** | **SIM-K-4-WD-5-PU** |

# Ordering data – Modular product system

| Ordering table | | Conditions | Code | | Enter code |
|---|---|---|---|---|---|
| Module no. | **539052** | | | | |
| Function | Connecting cable | | **NEBU** | | NEBU |
| Connection technology, left | Open end | [1] | **-LE** | | |
| | Socket with connecting thread M8 | | **-M8** | | |
| | Socket with connecting thread M12, A-coded | | **-M12** | | |
| Socket design | Without (only in the case of open end as connection technology on the left) | | | | |
| | Straight | | **G** | | |
| | Angled | | **W** | | |
| | Rotatable | [2] | **R** | | |
| Number of pins/wires (on the left) | 3-pin (suitable for open end, plug M8) | | **3** | | |
| | 4-pin (suitable for open end, plug M8) | | **4** | | |
| | 5-pin (suitable for 3, 4 and 5-pin plug M12) | | **5** | | |
| Indicators | Without LED, DC (standard) | | | | |
| | LED, NPN | [3] | **N** | | |
| | LED, DC | [4] | **L** | | |
| | 2x LED, PNP | [5] | **P2** | | |
| Cable characteristic | Standard | | **-K** | | |
| | Suitable for energy chains | | **-E** | | |
| | Suitable for robot applications | | **-R** | | |
| Cable length | 0.1 … 30 m (0.1 … 2.5 m in 0.1 m increments, 2.5 … 30 m in 0.5 m increments) | | **-...** | | |
| Wire cross section | 0.25 $mm^2$ (standard) | | | | |
| | 1.00 $mm^2$ | [6] | **Q8** | | |
| Cable colour | Grey (standard) | | | | |
| Cable designation | With inscription label holder (standard) | | | | |
| | Without inscription label holder | | **-N** | | |
| Connection technology, right | Open end (not possible in the case of open end as connection technology on the left) | [1] | **-LE** | | |
| | Plug with connecting thread M8 | | **-M8** | | |
| | Plug with connecting thread M12, A-coded | | **-M12** | | |
| Plug design | Without (only in the case of open end as connection technology on the right) | | | | |
| | Straight | | **G** | | |
| | Angled | | **W** | | |
| Number of pins/wires (on the right) | 2-pin | [7] | **2** | | |
| | 3-pin (suitable for M8/M12 socket) | [8] | **3** | | |
| | 4-pin (suitable for M8/M12 socket) | [8] | **4** | | |
| | 5-pin (suitable for M12 socket) | [8] [9] | **5** | | |

[1] LE With open end LE the number of pins/wires of the open end must be less than or equal to the number of pins of the opposite side.
[2] R Can only be combined with M8 (connection technology, left), 3-pin (pins/wires on the left), without display, standard wire cross section.
[3] N Can only be combined with M8 connection technology on the left and socket design W with 3 PINS/wires (on the left), or with M12 connection technology on the left and socket design W with 5 PINS/wires (on the left) and 3 PINS/wires (on the right).
[4] L Can only be combined with M8 connection technology on the left and 4 PINS/wires (on the left) and M8 connection technology on the right with 3 or 4 PINS/wires (on the left) or M12 connection technology on the right with 2 PINS/wires (on the left) or LE connection technology on the right with 2 PINS/wires (on the left).
Can only be combined with cable characteristic K.
[5] P2 Can only be combined with M12 connection technology on the left and socket design W with 4 PINS/wires (on the right).
[6] Q8 Can only be combined with M12 connection technology on the left and socket design G with 5 PINS/wires (on the left), and with M12 connection technology on the right and plug design G with 5 PINS/wires (on the left).
Can only be combined with cable characteristic E.
[7] 2 Can only be combined with M12 or LE connection technology on the right and L display.
Can only be combined with cable characteristic K.
[8] 3, 4, 5
With LE connection technology on the left, the number of wires (on the left) is copied over.
[9] 5 Can only be combined with M12 or LE connection technology on the left.

# Festo - Your Partner in Automation



**1 Festo Inc.**

5300 Explorer Drive
Mississauga, ON L4W 5G4
Canada

**Festo Customer Interaction Center**
Tel: 1 877 463 3786
Fax: 1 877 393 3786
Email: customer.service.ca@festo.com

**2 Festo Pneumatic**

Av. Ceylán 3,
Col. Tequesquináhuac
54020 Tlalnepantla,
Estado de México

**Multinational Contact Center**
01 800 337 8669

ventas.mexico@festo.com

**3 Festo Corporation**

1377 Motor Parkway
Suite 310
Islandia, NY 11749

**4 Regional Service Center**

7777 Columbia Road
Mason, OH 45040

**Festo Customer Interaction Center**
1 800 993 3786
1 800 963 3786
customer.service.us@festo.com

**Connect with us**

www.festo.com/socialmedia

**www.festo.com**

Subject to change