■Voltage Doubler/Bridge Rectifier Automatic Switch ICs

Part No.	Absolute Maximum Ratings (T_a=25°C)					Electrical Characteristics (T_a=25°C)					Remarks
	Repetitive Peak Off-state Voltage	RMS On-state Current	Surge On-state Current	Operating Temperature	Storage Temperature	Voltage Doubler Function Turn-on Voltage	Setting Switchover Voltage		OFF-state Current	ON-state Voltage	
	V_{DRM} (V)	I_T (RMS)(A)	I_{TSM} (A)	T_{OP} (°C)	T_{stg} (°C)	V_s (V)	V_{C1} (V)	V_{C2} (V_{AC})*	I_{DRM} (μA)	V_{TH} (V)	
STR80145A	500	5.0	50	–10 to +100(T_C)	–30 to +125	AC80 max	196±5	145	100 max	1.8 max	
81145A		10.0	100								
81159A							215±5	159			
STR82145	500	5.0	50	–20 to +100(T_C)	–40 to +125	DC100 max	205±5	145	100 max	1.8 max	With latching capability
83145		10.0	100								
83159							225±5	159			

*Reference value

■External Dimensions

(unit: mm)

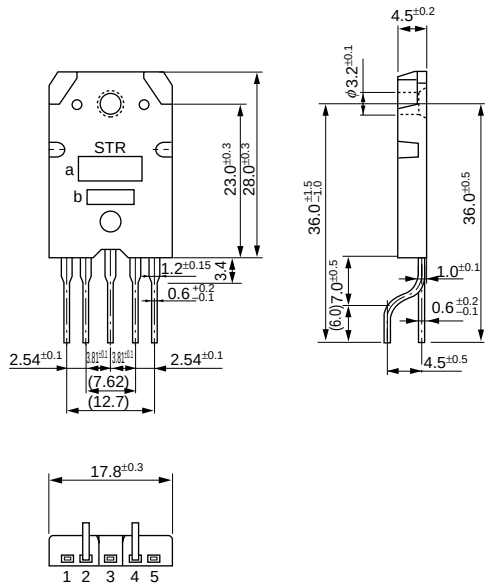

a. Part Number
b. Lot Number

Forming No.501