Rev	AWO #	Description	Date	Appr
-		RELEASED	10/11/11	

APPROVED: _____

DATE: _____ TITLE: _____

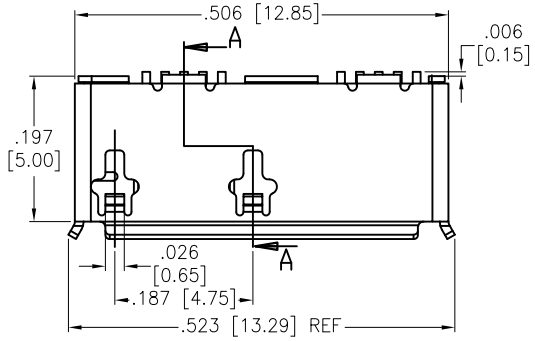

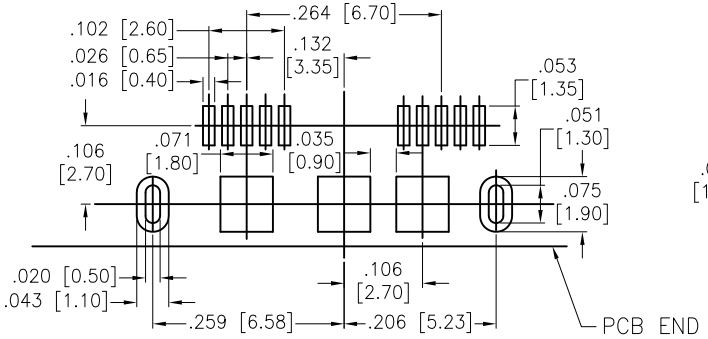

RECOMMENDED PCB LAYOUT

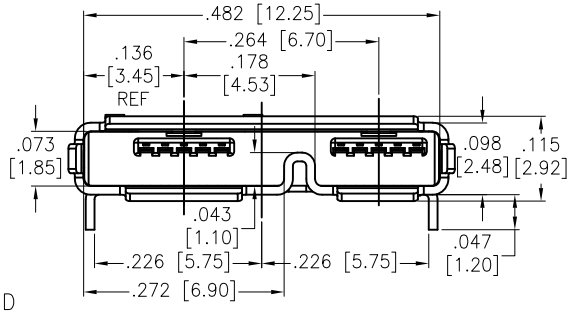

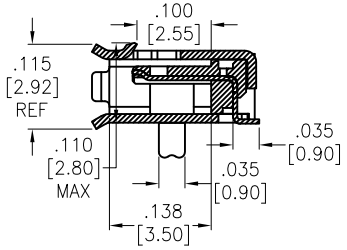

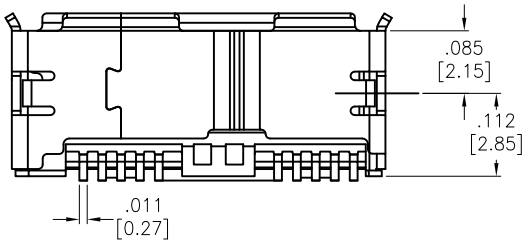

SPECIFICATIONS:
Material:
Insulator: LCP, rated UL 94V–0
Insulator color: Black
Contacts: Brass
Shell: Stainless Steel, Nickel over plated
Plating:
15u" Gold Flash over Nickel overall
Electrical:
Operating voltage: 30 VAC max.
Current rating: 1 Amp max.
Contact resistance: 50 mohms max.
Insulation resistance: 100 Mohms min. @ 500 VDC
Dielectric withstanding voltage: 250 VAC for 1 minute
Temperature Rating:
Operating temperature: –20°C to +85°C
Environmental:
Lead free, RoHS compliant.
Recommended soldering temp: 260°C for 5 sec.

RoHS COMPLIANT

UNLESS OTHERWISE SPECIFIED
ALL DIMENSIONS ARE INCHES [MM]
TOLERANCES: EXCEPT AS NOTED

INCHES		HOLES	
.X	± .10	Ø.X	±.10
.XX	± .020	Ø.XX	±.015
.XXX	± .015	Ø.XXX	±.010

APPROVALS		DATE
DRAWN	AY	10/11/11
CHECKED	RC	10/11/11
APPROVED		

ADAM TECH
909 Rahway Avenue, Union, NJ 07083
Phone: 908-687-5000 Fax: 908-687-5710

TITLE
MICRO USB 3.0 AB TYPE, FEMALE, 10PIN, SMT

SIZE	PART NO.	REV.
X	MCR-AB3-RA-SMT-15	-

REF: S00126T | SCALE: NTS | SHEET 1 OF 1