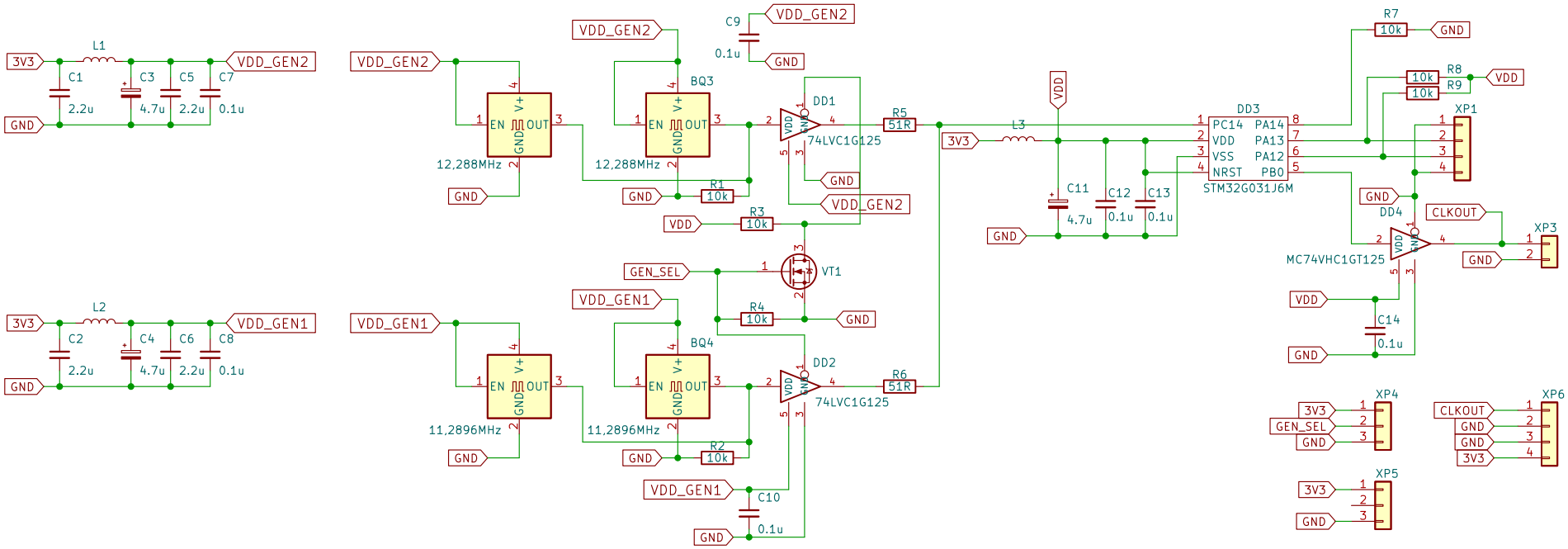

Sheet: /
File: DSPO_49_45.kicad_sch

Title:

Size: A4	Date:	**Rev:**
KiCad E.D.A. kicad (6.0.4)		Id: 1/1