APPLICATION CHART

PART NO.	CAVITY	4	5	6	7	8	9	10	11	15	16	17	18	19	20	21	22	23	24	25	26	27	28	29	31	32	33	34	35	36	37	38	39	40	41	42	43	44	45
33120567	OPEN	X	X	X	X	X	X	X	X	X	X	X	X	X	X	X	X	X	X	X	X	X	X	X	X	X	X	X	X	X	X	X	X	X	X	X	X	X	X
	CLOSE																																						
33222138	CAVITY	4	5	6	7	8	9	10	11	15	16	17	18	19	20	21	22	23	24	25	26	27	28	29	31	32	33	34	35	36	37	38	39	40	41	42	43	44	45
	OPEN	X	X	X	X	X	X	X	X	X	X	X	X	X	X	X	X	X	X	X	X	X	X	X	X	X	X	X	X	X	X	X	X	X	X	X	X	X	X
	CLOSE																																						
33222139	CAVITY	4	5	6	7	8	9	10	11	15	16	17	18	19	20	21	22	23	24	25	26	27	28	29	31	32	33	34	35	36	37	38	39	40	41	42	43	44	45
	OPEN	X	X		X	X	X		X	X	X		X	X		X	X	X	X	X	X				X	X				X	X		X	X		X				
	CLOSE			0				0				0			0							0	0	0			0	0	0			0			0		0	0	0
33222140	CAVITY	4	5	6	7	8	9	10	11	15	16	17	18	19	20	21	22	23	24	25	26	27	28	29	31	32	33	34	35	36	37	38	39	40	41	42	43	44	45
	OPEN	X	X		X	X	X		X	X	X		X	X		X	X	X	X	X	X				X	X				X	X		X			X				
	CLOSE			0				0				0			0							0	0	0			0	0	0			0		0	0		0	0	0
33222141	CAVITY	4	5	6	7	8	9	10	11	15	16	17	18	19	20	21	22	23	24	25	26	27	28	29	31	32	33	34	35	36	37	38	39	40	41	42	43	44	45
	OPEN	X	X		X	X	X		X	X	X		X	X		X	X	X	X	X	X				X	X				X	X		X			X				
	CLOSE			0				0	0			0			0					0		0	0	0			0	0	0			0		0	0		0	0	0
33376010	CAVITY	4	5	6	7	8	9	10	11	15	16	17	18	19	20	21	22	23	24	25	26	27	28	29	31	32	33	34	35	36	37	38	39	40	41	42	43	44	45
	OPEN	X	X		X	X	X		X	X	X		X	X		X	X	X	X	X	X				X	X		X		X	X		X			X				
	CLOSE			0				0				0			0							0	0	0			0	0	0			0		0	0		0	0	0
35015381	CAVITY	4	5	6	7	8	9	10	11	15	16	17	18	19	20	21	22	23	24	25	26	27	28	29	31	32	33	34	35	36	37	38	39	40	41	42	43	44	45
	OPEN	X	X	X	X	X	X	X	X	X	X	X	X	X		X		X	X			X	X	X					X	X					X	X	X		
	CLOSE														0		0			0	0				0	0	0	0			0	0	0	0					0	0
35232279	CAVITY	4	5	6	7	8	9	10	11	15	16	17	18	19	20	21	22	23	24	25	26	27	28	29	31	32	33	34	35	36	37	38	39	40	41	42	43	44	45
	OPEN		X		X	X	X	X	X	X		X		X	X	X		X	X	X	X		X	X						X	X	X	X			X		X		
	CLOSE	0		0							0		0				0					0			0	0	0	0	0					0	0				0	
35254544	CAVITY	4	5	6	7	8	9	10	11	15	16	17	18	19	20	21	22	23	24	25	26	27	28	29	31	32	33	34	35	36	37	38	39	40	41	42	43	44	45
	OPEN	X	X				X	X	X	X	X	X		X				X		X	X	X	X	X			X		X	X	X	X	X			X	X		X	
	CLOSE			0	0	0						0		0	0	0	0		0						0	0		0						0				0		0
35290582	CAVITY	4	5	6	7	8	9	10	11	15	16	17	18	19	20	21	22	23	24	25	26	27	28	29	31	32	33	34	35	36	37	38	39	40	41	42	43	44	45
	OPEN	X	X	X	X	X	X	X				X	X	X					X						X		X		X	X				X		X	X			
	CLOSE									0	0				0	0	0	0		0	0	0	0	0		0		0			0	0	0		0				0	0
35294629	CAVITY	4	5	6	7	8	9	10	11	15	16	17	18	19	20	21	22	23	24	25	26	27	28	29	31	32	33	34	35	36	37	38	39	40	41	42	43	44	45
	OPEN	X	X				X	X	X	X	X	X				X	X	X	X	X	X	X	X	X	X	X							X			X	X			
	CLOSE			0	0	0							0	0	0													0	0	0	0			0	0			0	0	0
35333693	CAVITY	4	5	6	7	8	9	10	11	15	16	17	18	19	20	21	22	23	24	25	26	27	28	29	31	32	33	34	35	36	37	38	39	40	41	42	43	44	45
	OPEN	X	X	X	X	X	X	X	X			X	X	X		X	X		X			X			X	X			X					X			X	X		
	CLOSE									0	0				0			0		0	0		0	0			0	0		0	0	0			0	0			0	0
35337284	CAVITY	4	5	6	7	8	9	10	11	15	16	17	18	19	20	21	22	23	24	25	26	27	28	29	31	32	33	34	35	36	37	38	39	40	41	42	43	44	45
	OPEN	X	X		X	X	X	X	X	X						X	X	X	X	X	X	X	X	X	X	X				X	X	X			X	X	X			
	CLOSE			0								0	0	0	0													0	0	0		0	0						0	0
35374918	CAVITY	4	5	6	7	8	9	10	11	15	16	17	18	19	20	21	22	23	24	25	26	27	28	29	31	32	33	34	35	36	37	38	39	40	41	42	43	44	45
	OPEN		X		X	X	X	X	X	X		X		X	X	X	X	X	X	X	X		X	X						X	X	X	X			X		X	X
	CLOSE	0		0							0		0									0			0	0	0	0	0											
35374921	CAVITY	4	5	6	7	8	9	10	11	15	16	17	18	19	20	21	22	23	24	25	26	27	28	29	31	32	33	34	35	36	37	38	39	40	41	42	43	44	45
	OPEN	X	X	X	X	X	X	X	X			X	X	X		X			X			X			X	X			X					X		X	X	X		
	CLOSE									0	0				0		0	0		0	0		0	0			0	0		0	0	0			0				0	0
35385799	CAVITY	4	5	6	7	8	9	10	11	15	16	17	18	19	20	21	22	23	24	25	26	27	28	29	31	32	33	34	35	36	37	38	39	40	41	42	43	44	45
	OPEN	X	X	X	X			X	X			X	X	X	X		X	X	X	X	X								X	X	X	X	X	X		X				
	CLOSE					0	0			0	0	0				0						0	0	0	0	0	0	0							0			0	0	0
35397507	CAVITY	4	5	6	7	8	9	10	11	15	16	17	18	19	20	21	22	23	24	25	26	27	28	29	31	32	33	34	35	36	37	38	39	40	41	42	43	44	45
	OPEN	X	X	X	X	X	X	X	X			X	X	X	X				X	X	X				X			X	X				X	X	X	X	X	X	X
	CLOSE									0	0					0	0	0				0	0	0			0	0			0	0	0							

SYMBOL DEFINITION

A DIMENSION WITHOUT AN INSPECTION REPORT SYMBOL ( ) DOES NOT REQUIRE INSPECTION. IT MAY BE CONTROLLED ON THE INDIVIDUAL COMPONENT DRAWING.

TOTAL NO OF INSPECTIONS REQUIRED	3
LAST NO. USED	3

MISSING SYMBOLS

NO MISSING SYMBOL NUMBER

DWG STATUS

DATE	STG	REV	N/P	CHG	ZONE	REVISION HISTORY	AUTH	DR	APVD1	APVD2
15OC13	R	01	-	-		RELEASED PART DRAWING	423963	JW	SBH	EZ
20JN15	R	02	-	-		PN 33222138,33222139,33222140, 33222141 ADDED	428693	JW	WDZ	HJJ
22JN15	R	02	AA	-		TERMINAL INFORMATION ADDED	431948	JW	WDZ	HJJ
22JN16	R	02	AB	-		CAVITY PLUG 1.2 ADDED	433480	JY	WDZ	HJJ
20JL16	R	02	AC	-		ADD NEW PN 33376010	433746	JY	WDZ	HJJ
26AU16	R	02	AD	-		ADD NEW PN 33376010	434050	JY	WDZ	HJJ
24JL17	R	02	AE	-		ADD NEW PN 35015381	437311	AS	ZFW	ZFW
28JN18	R	02	AF	-		ADD NEW PN 35232279	440292	AS	HW	SBH
24AU18	R	02	AG	-		ADD NEW PN 35254544	440865	AS	KZ	SBH
12DE18	R	02	AH	-		ADD NEW PN 35290582.35294629	441903	AS	JYC	SBH
02AP19	R	02	AI	-		ADD NEW PN 35333693.35337284	442877	AS	JYC	SBH
09JY19	R	02	AJ	-		ADD NEW PN 35374918, 35374921	443882	ZML	HZ	SBH
08AU19	R	02	AK	-		ADD NEW PN 35385799	444189	ZML	HZ	SBH
20SE19	R	02	AL	-		ADD NEW PN 35397507	444568	ZML	HZ	SBH

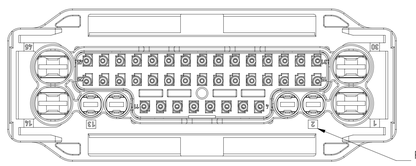

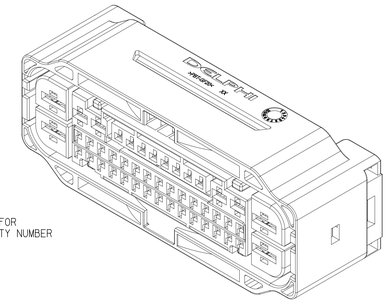

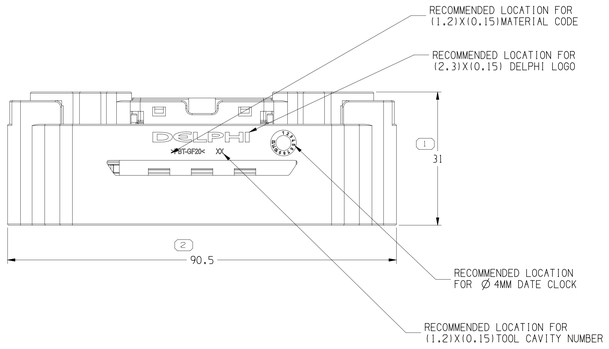

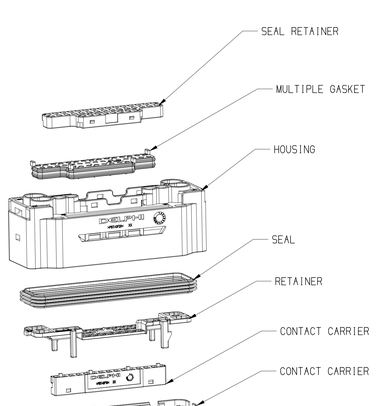

SCAL 1:1

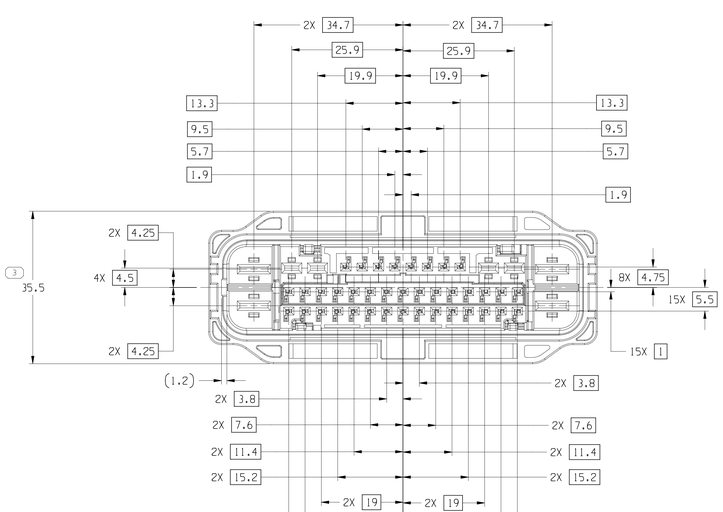

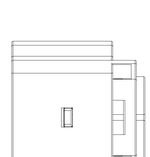

13963810	---	CAVITY PLUY 1.2
13976118	>4.0-6.0	ASM TERM F CTS 630 SN SEALED
13976117	>2.5-4.0	ASM TERM F CTS 630 SN SEALED
13976116	1.5-2.5	ASM TERM F CTS 630 SN SEALED
13976115	0.5-1.0	ASM TERM F CTS 630 SN SEALED
15446675	1.5-2.5	ASM TERM F CTS 280 SN SEALED TANG
15446674	0.5-1.0	ASM TERM F CTS 280 SN SEALED TANG
15446673	0.35	ASM TERM F CTS 280 SN SEALED TANG
13881788	0.75	TERM F OCS 1.2 SN
13881789	0.35-0.5	TERM F OCS 1.2 SN
PART NO	WIRE SIZE	DESCRIPTION

PART NO	HOUSING	SEAL	RETAINER	CONTACT CARRIER	CONTACT CARRIER	MULTIPLE GASKET	SEAL TETAINER
35397507	33224443	15516541	15516542	15516543	15516544	15516545	15516546
35385799	33224443	15516541	15516542	15516543	15516544	15516545	15516546
35374921	33224443	15516541	15516542	15516543	15516544	15516545	15516546
35374918	33224443	15516541	15516542	15516543	15516544	15516545	15516546
35337284	33224443	15516541	15516542	15516543	15516544	15516545	15516546
35333693	33224443	15516541	15516542	15516543	15516544	15516545	15516546
35290582	33224443	15516541	15516542	15516543	15516544	15516545	15516546
35294629	33224443	15516541	15516542	15516543	15516544	15516545	15516546
35254544	33224443	15516541	15516542	15516543	15516544	15516545	15516546
35232279	33224443	15516541	15516542	15516543	15516544	15516545	15516546
35015381	33224443	15516541	15516542	15516543	15516544	15516545	15516546
33376010	33224443	15516541	15516542	15516543	15516544	15516545	15516546
33222141	33224443	15516541	15516542	15516543	15516544	15516545	15516546
33222140	33224443	15516541	15516542	15516543	15516544	15516545	15516546
33222139	33224443	15516541	15516542	15516543	15516544	15516545	15516546
33222138	33224443	15516541	15516542	15516543	15516544	15516545	15516546
33120567	33120568	15516541	15516542	15516543	15516544	15516545	15516546 ← SEE NOTE #4

NOTES

1. UNLESS OTHERWISE SPECIFIED AND/OR INDICATED:

   DIMENSIONS ARE TO FACE OF VIEW SHOWN AND AUTOMATICALLY ROUNDED BY COMPUTER FOR INSPECTION (SEE MATH MODEL FOR PRECISE DIMENSIONS). FOR ALL OTHER DIMENSIONS NOT SHOWN BUT REQUIRED FOR TOOL BUILD, SEE MATH MODEL FOR PRECISE TOOL PATH DATA.

2. 1.2 CAVITY USEABLE FOR WIRE RANGE 0.35MM² TO 0.75MM²(FLRI).

3. FOR APPLICATION DATA SEE THE INDIVIDUAL APPLICATION DRAWINGS.

4. THE HOLES OPEN CONDITION OF SEAL RETAINER 15516546. SEE THE APPLICATION CHART.

(1) PROCESS SENSITIVE DIMENSION

DIMENSIONS ENCLOSED IN ( ) INDICATE REFERENCE DIMENSIONS AND NO TOLERANCE LIMITS ARE ESTABLISHED

DIMENSIONAL RANGE (MM)								CHART M
FROM	> 0	> 6	> 30	> 70	>120	>160	>200	>250	>315
TO	6	30	70	120	160	200	250	315	400
TOLERANCE UNLESS OTHERWISE SPECIFIED									
	±0.1	±0.2	±0.3	±0.4	±0.45	±0.55	±0.7	±0.85	±1.05
ANGULAR TOLERANCE ±1°									

A ——— LINE DRAWN THROUGH A PART NUMBER INDICATES THAT PHYSICAL PARTS ARE NOT AVAILABLE FOR ORDERING.

PART NUMBERS THAT DO NOT HAVE A LINE PRESENT INDICATE THAT PHYSICAL PARTS ARE AVAILABLE FOR ORDERING.

CONTACT APTIV SALES TO ASSURE AVAILABILITY OF PARTS.

DWG TYPE: PART DRAWING

STYLE

VOLUME (CM³) | DISTR CODE

UNLESS OTHERWISE SPECIFIED

THIS DOCUMENT IS IN ACCORDANCE WITH ASME Y14.5M-1994 AS AMENDED BY THE GM GLOBAL DIMENSIONING AND TOLERANCING ADDENDUM-2001. SEPARATE PATTERNS OF FEATURES MAY BE GAGED SEPARATELY REGARDLESS OF DATUM REFERENCES.

ALL DIMENSIONS ARE IN MILLIMETERS

REFERENCE

THIRD ANGLE PROJECTION

DO NOT SCALE

USE MATH DATA

NX

•APTIV•

CONNECTION SYSTEMS

Anting, China

COPYRIGHT 2013 APTIV. ALL RIGHTS RESERVED.

THIS DRAWING IS THE PROPERTY OF APTIV AND CONTAINS APTIV CONFIDENTIAL INFORMATION. THE REPRODUCTION, DISTRIBUTION AND UTILIZATION OF THIS DOCUMENT OR ITS RELATED CAD MATH DATA, AS WELL AS COMMUNICATION OF ANY CONTENT TO OTHERS, WITHOUT EXPRESS AUTHORIZATION, IS PROHIBITED.

		DATE
DR		
APVD1	JUN WEI	15OC13
APVD2	SUIBIN HUANG	15OC13
APVD3	ERIC ZHOU	15OC13
APVD4		
APVD5		

SUBSTANCES OF CONCERN AND RECYCLED CONTENT PER APTIV 10949001

MATERIAL: SEE COMPONENT DRAWING

DRAWING NAME: TAXI CONN 46 F SLD

DRAWING NUMBER: 33120566

SIZE	SCALE	FRAME NO	SHEET NO	STG	REV	N/P
A0	2:1	1 OF 1	1 OF 1	R	02	AL

User: F_PZhx
Part: 33120566-01020_001/00AL
Path: 33120566-01020_001/00AL
Date: 24-Sep-19 Time: 10:27:14

Mouser Electronics

Authorized Distributor

Click to View Pricing, Inventory, Delivery & Lifecycle Information:

Aptiv:
33222138