図面番号(DRAWING NO.) SJ119766

版数 VER.	年月日 DATE	CN NO.	変更内容 DESCRIPTION	製図 DR.	担当 CHK.	査閲 APPD.	承認 APPD.
2	07/SEP/2018	026499	PRESCRIPTIVE RECONSIDERATION		T.KUROSAWA	H.OOTANI	M.KIKUCHI

WISDOM承認 2018/09/10

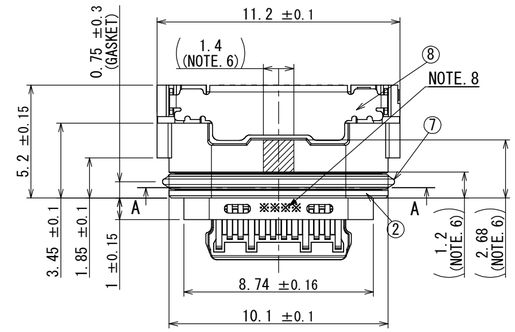

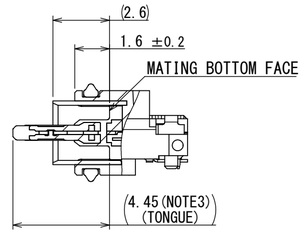

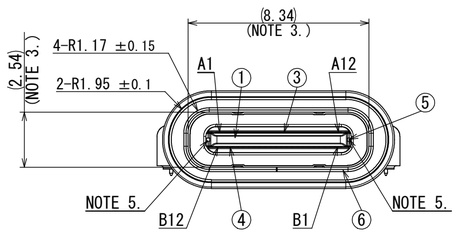

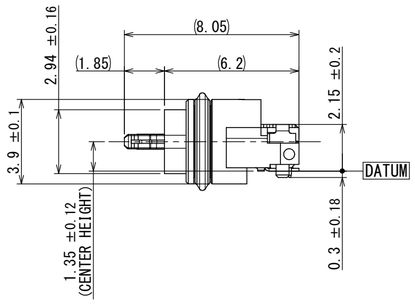

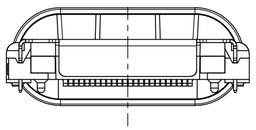

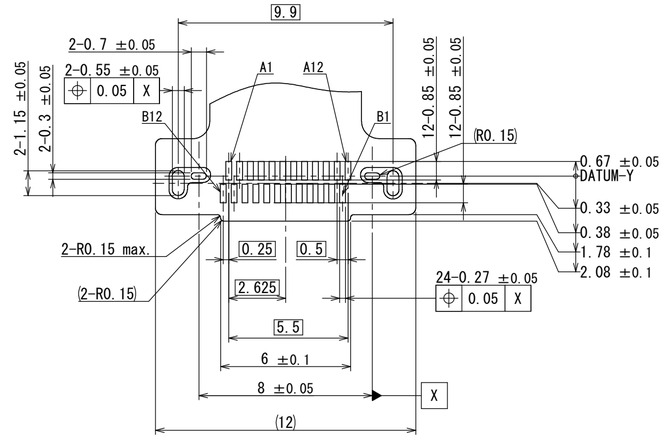

APPLICABLE P.C.B. DIMENSION (REF.)
SURFACE VIEW FROM CONNECTOR MOUNTING SIDE.

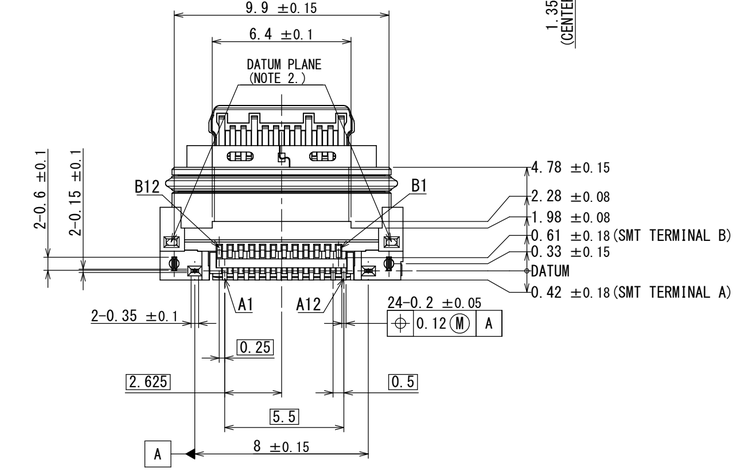

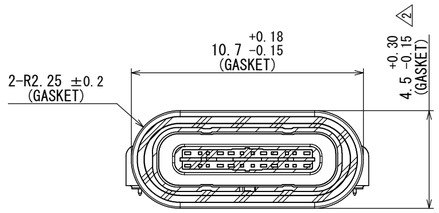

A-A
(5 : 1)

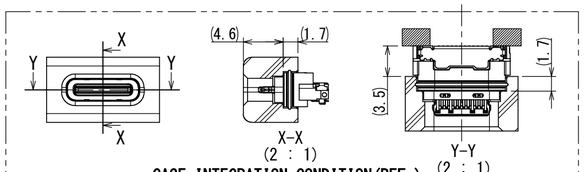

CASE INTEGRATION CONDITION(REF.)

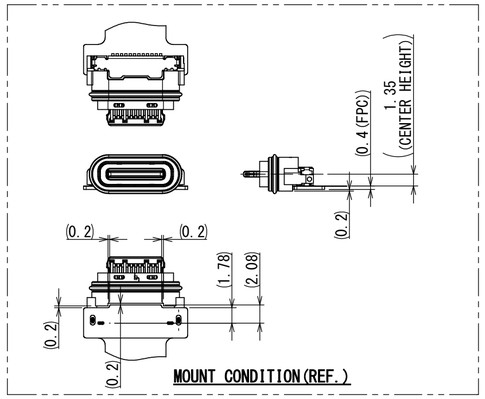

MOUNT CONDITION(REF.)

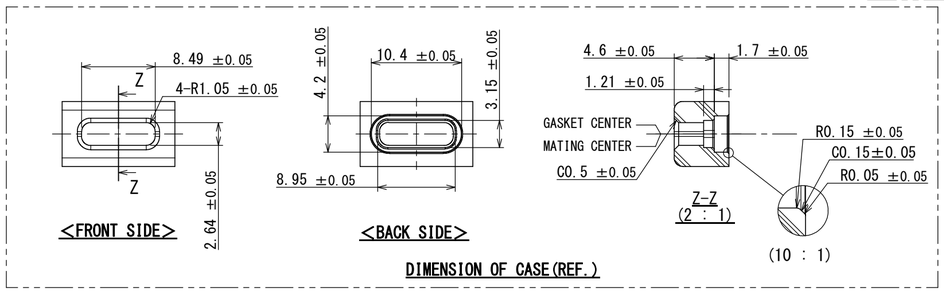

DIMENSION OF CASE(REF.)

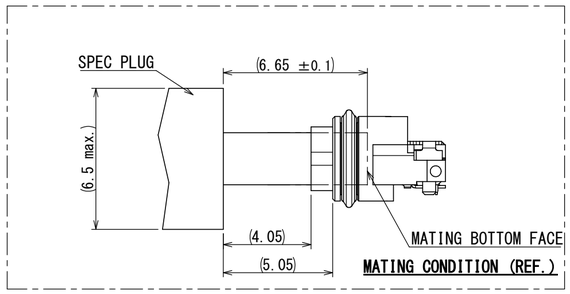

MATING CONDITION (REF.)

NOTE 1. COPLANARITY OF SMT TERMINAL BE 0.1 MAXIUM.
NOTE 2. THIS FACE IS DATUM PLANE.
NOTE 3. MATING DIMENSIONS CONSIST OF
"Universal Serial Bus Type-C Cable and Connector Specification Revision 1.2"
NOTE 4. THE SHELL LENGTH IS LESS THAN THE MINIMUM SPECIFIED BY THE USB TYPE C STANDARD.
AS SUCH IT CANNOT INDEPENDENTLY BE GURANTEED TO MEET ALL TYPE C MECHANICAL REQUIREMENTS.
THE SYSTEM IMPLEMENTER IS RESPONSIBLE FOR ACHIEVING PRODUCT RELIABILITY AND PASSING USB COMPLIANCE TESTING.
REFERENCE THE USB TYPE C SPECIFICATION RELEASE 1.2, SECTION 3.2.1, NOTE 7.
NOTE 5. METAL EXPOSED AREA SIZE COULD BE SLIGHTLY CHANGED BASED ON MOLDING PROCESS CONDITION IN EACH LOT,
HOWEVER THIS WOULD NOT AFFECT CONNECTOR FUNCTION.
NOTE 6. VACUUM AREA.
NOTE 7. PIN ASSIGNMENT (FRONT VIEW)

Pin No.	A1	A2	A3	A4	A5	A6	A7	A8	A9	A10	A11	A12
	GND	TX1+	TX1−	V_{BUS}	CC1	D+	D−	SBU1	V_{BUS}	RX2−	RX2+	GND
	GND	RX1+	RX1−	V_{BUS}	SBU2	D−	D+	CC2	V_{BUS}	TX2−	TX2+	GND
Pin No.	B12	B11	B10	B9	B8	B7	B6	B5	B4	B3	B2	B1

NOTE 8. LOT NO. IS MARKED AS SHOWN IN BELOW TABLE.

YEAR(1 DIGIT)		MONTH(1 DIGIT)		DAY(1 DIGIT)								LINE(1 DIGIT)	
YEAR	MARKING	MONTH	MARKING	DAY	MARKING	DAY	MARKING	DAY	MARKING	DAY	MARKING	LINE	MARKING
2018	8	1	1	1	1	11	B	21	M	31	Y	Manual	0
2019	9	2	2	2	2	12	C	22	N			1	1
2020	0			3	3	13	D	23	P			2	2
2021	1	*	*	4	4	14	E	24	Q				
2022	2	*	*	5	5	15	F	25	R				
2023	3	*	*	6	6	16	G	26	S			*	*
2024	4	9	9	7	7	17	H	27	T			*	*
2025	5	10	A	8	8	18	J	28	U			*	*
2026	6	11	B	9	9	19	K	29	V				
2027	7	12	C	10	A	20	L	30	X				

NOTE 9. THE P.C.B. LAYOUT IS ONLY FOR REFERENCE.
ACTUAL PCB DESIGN (INCLUDING DIMENSION AND TOLERANCE) IS SUPPOSED TO BE INVESTIGATED BY DEVICE MANUFACTURER.

符号 No.	名称 DESCRIPTION	個数 QTY.	材料 MATERIAL	仕上 FINISH	備考 REMARKS
8	REAR SHIELD	1	STAINLESS STEEL	NICKEL PLATING	−
7	GASKET	1	SILICONE RUBBER	−	COLOR:RED
6	SHELL	1	STAINLESS STEEL	−	−
5	MID PLATE	1	STAINLESS STEEL	NICKEL PLATING	−
4	CONTACT B	12	COPPER ALLOY	CONTACT AREA: GOLD OVER NICKEL SOLDER TAILS: GOLD FLASH OVER NICKEL	CONTACT AREA: NICKEL:1μm MIN GOLD :0.1μm MIN
3	CONTACT A	12			
2	SUB ASSEMBLY INSERT MOLD	1	HEAT RESISTING PLASTIC	−	COLOR:BLACK
1	MID PLATE INSERT MOLD	1	HEAT RESISTING PLASTIC	−	COLOR:BLACK

仕様書(SPECIFICATION)
JACS-30398
JAHL-30398

第1版(ORIGINAL DATE) 25/MAY/2018

一般公差(GENERAL TOLERANCE)
寸法(DIMENSION): .± 0.8, .× ±0.4, .×× ±0.1, .××× ±
角度(ANGLES): ×° ±, ×°×' ±
単位(UNIT) : mm

製図 DR.
担当 CHK. T.KUROSAWA
査閲 APPD. H.OOTANI
承認 APPD. M.KIKUCHI

尺度(SCALE) 5:1
シリーズ(SERIES) DX07
名称(TITLE) DX07W024JA2
質量(MASS)

日本航空電子工業株式会社
JAPAN AVIATION ELECTRONICS INDUSTRY, LTD.

図面番号(DRAWING NO.) SJ119766
版数(VER.) 2
SIZE A2

JAE-CONNECTOR.COM
Reference Only

JAE Connector DIV. Proprietary.Copyright(C) 2018, Japan Aviation Electronics Industry, LTD.

DCF-C-213H(12.08)

Mouser Electronics

Authorized Distributor

Click to View Pricing, Inventory, Delivery & Lifecycle Information:

JAE Electronics:
DX07W024JA2R1000