EV78Y10A

SAM G55 Curiosity Audio Board User's Guide

Introduction

The Microchip Technology SAM G55 Curiosity Audio Board (EV78Y10A) includes an integrated programmer and debugger (EDBG), therefore additional hardware is not required to get started. Users can expand functionality through the MikroElectronika mikroBUS™ Click™ adapter boards, add Wi-Fi® connectivity capability using the Microchip expansions boards, and add audio input and output capability with Microchip audio daughter boards.

With or without expansion boards, the SAM G55 Curiosity Audio Board provides the freedom to develop a variety of applications, including audio, Internet of Things (IoT), and proof-of-concept designs.

SAM G55 Curiosity Audio Board Features

The SAM G55 Curiosity Audio Board has the following features:

- Microchip ATSAMG55J19 microcontroller
- Embedded debugger (EDBG):
  - USB interface
  - Programming and debugging (target) through Serial Wire Debug (SWD)
  - Virtual COM-port interface to target through UART
  - Data Gateway Interface (DGI) to target through USART or TWI
  - Four GPIOs connected to the target for code instrumentation
  - Target USB connection with Host and Device support
- Digital I/O:
  - Three mechanical buttons (including one reset button)
  - Two user LEDs
  - One Xplained pro extension compatible interface
- One X32 interface supporting audio and Bluetooth® BLE
- One mikroBUS interface
- Three possible power sources:
  - External power
  - Embedded debugger USB
  - Target USB
- 32 kHz crystal and 12 MHz crystal

Kit Contents

The kit contains one SAM G55 Curiosity Audio Board (EV78Y10A).

Note: If any part is missing from the kit, contact a Microchip sales office for assistance. A list of Microchip offices for sales and service is provided on the last page of this document.

The SAM G55 Curiosity Audio Board (EV78Y10A) is shown in the following figure:

© 2021 Microchip Technology Inc. and its subsidiaries

Figure 1. SAM G55 Curiosity Audio Board

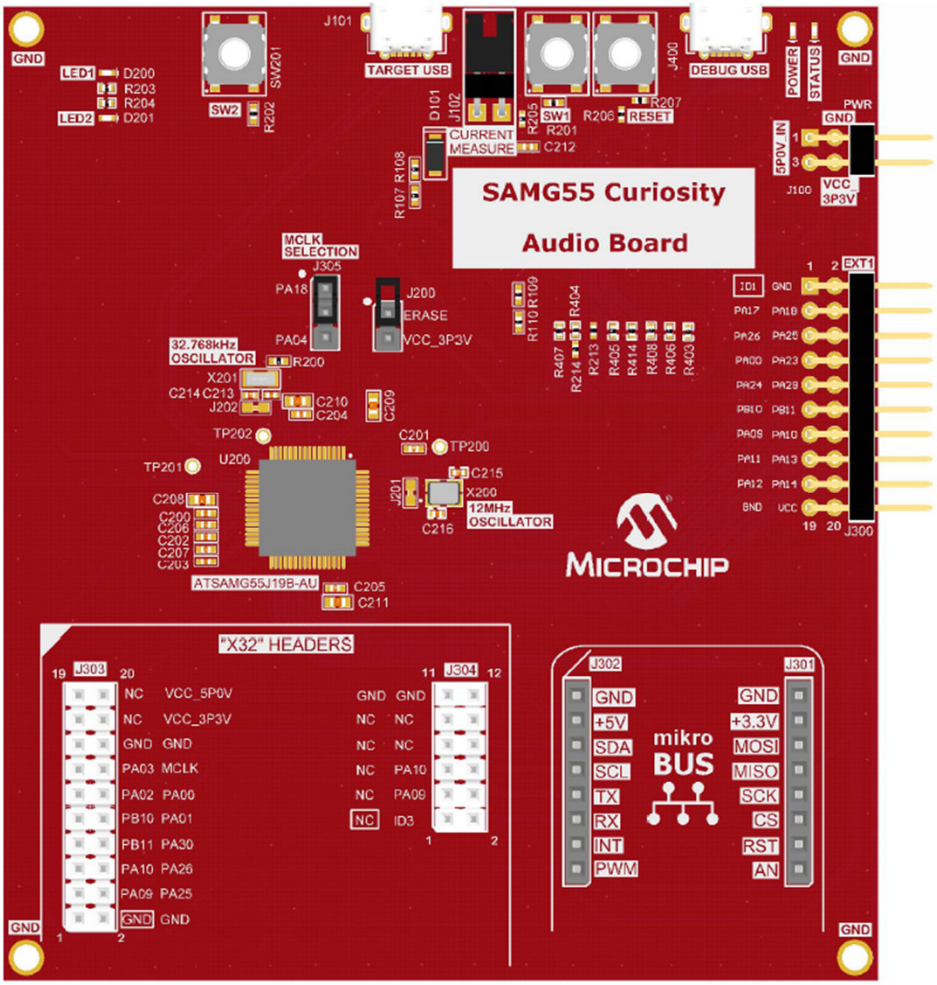

Table of Contents

Introduction....1

1. Development Board Functionality and Features....4
    1.1. SAM G55 Curiosity Audio Board Feature Location....4
    1.2. Embedded Debugger....4
    1.3. Power Sources....5
    1.4. X32 Audio Interface....5
    1.5. mikroBUS....7
    1.6. Xplained Pro Extension Standard Header....8
    1.7. Buttons and LEDs....9
    1.8. USB....10
    1.9. Strapping Options....10

2. Hardware....11
    2.1. Schematics....11
    2.2. Layer Plots....16
    2.3. Bill of Materials....30
    2.4. Board Dimensions....32
    2.5. Hardware Revision History....32

3. References....33

4. Revision History....34

The Microchip Website....35

Product Change Notification Service....35

Customer Support....35

Microchip Devices Code Protection Feature....35

Legal Notice....35

Trademarks....36

Quality Management System....37

Worldwide Sales and Service....38

© 2021 Microchip Technology Inc.
and its subsidiaries

1. Development Board Functionality and Features

1.1 SAM G55 Curiosity Audio Board Feature Location

Figure 1-1. SAM G55 Curiosity Audio Board Layout (Top View)

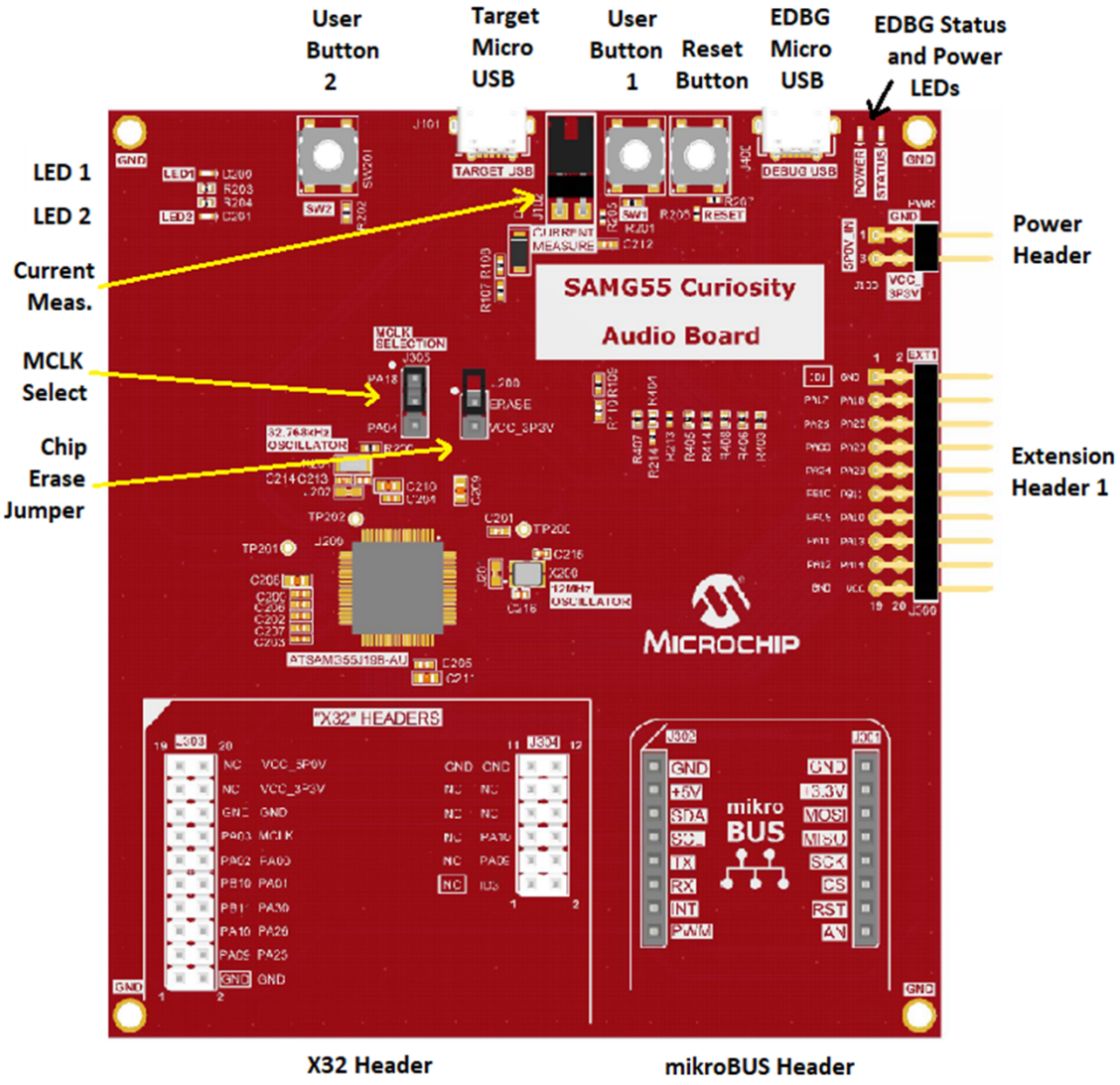

1.2 Embedded Debugger

The SAM G55 Curiosity Audio Board contains the Embedded Debugger (EDBG) for on-board debugging. The EDBG is a composite USB device of three interfaces; a debugger, Virtual COM Port, and a Data Gateway Interface (DGI).

Together with MPLAB® X IDE, the EDBG debugger interface can program and debug the ATSAMG55J19. On SAM G55 Curiosity Audio Board, the SWD interface is connected between the EDBG and the ATSAMG55J19.

The Virtual COM Port is connected to a UART on the ATSAMG55J19 and provides an easy way to communicate with the target application through terminal software. It offers variable baud rate, parity, and stop bit settings.

Note: The settings on the ATSAMG55J19 must match the settings given in the terminal software.

Info: The virtual COM port in the EDBG requires the terminal software to set the data terminal ready (DTR) signal to enable the UART pins connected to the ATSAMG55J19. If the DTR signal is not enabled, the UART pins on the EDBG is kept in high-z (tristate) rendering the virtual COM port unusable. The DTR signal is set automatically by some terminal software, but it may have to be manually enabled in the terminal.

The DGI consists of several physical interfaces for communication with the Host computer. Communication over the interfaces is bidirectional. It can be used to send events and values from the ATSAMG55J19 or as a generic printf-style data channel. Traffic over the interfaces can be timestamped on the EDBG for more accurate tracing of events. Note that timestamping imposes an overhead that reduces maximal throughput. The Data Visualizer is used to send and receive data through DGI.

The EDBG controls two LEDs on the SAM G55 Curiosity Audio Board; a power LED, and a status LED. The following table shows how the LEDs are controlled in different operation modes.

Table 1-1. EDBG LED Control

Operation mode	Power LED	Status LED
Normal operation	Power LED is lit when power is applied to the board.	Activity indicator, LED flashes when any communication happens to the EDBG.
Bootloader mode (idle)	The power LED and the status LED blinks simultaneously.	
Bootloader mode (firmware upgrade)	The power LED and the status LED blinks in an alternating pattern.	

1.3 Power Sources

The SAM G55 Curiosity Audio Board kit can be powered by several power sources as listed in the following table.

Table 1-2. Power Sources for the SAM G55 Curiosity Audio Board

Power Input	Voltage Requirements	Current Requirements	Connector Marking
External power	5V ±2% (±100mV) for USB Host Operation 4.3V to 5.5V if USB host operation is not required.	Recommended minimum is 1A to be able to provide enough current for connected USB devices and the board itself. Recommended maximum is 2A due to the input protection maximum current specification.	PWR
Embedded debugger USB	4.4V to 5.25V (according to USB spec.)	500mA (according to USB spec.)	DEBUG USB
Target USB	4.4V to 5.25V (according to USB spec.	500mA (according to USB spec.)	TARGET USB

The kit will automatically detect which power sources are available and choose which one to use according to the following priority:

1. External power.
2. Embedded Debugger USB.
3. Target USB.

Info: External power is required when 500mA from a USB connector is not enough to power the board with possible extension boards. A connected USB device in a USB host application might easily exceed this limit.

1.4 X32 Audio Interface

The X32 audio interface is a 32-pin interface to the board which supports audio codec, DACs, and Bluetooth® radios. The X32 audio interface has audio supply I^2S, other control lines, and data interfaces.

1.4.1 Pinout

The following table shows the pinout and description for the X32 Audio interface. Refer to the Schematics for additional information.

Table 1-3. X32 Audio Interface Pinout

Pin Number	Name	Description	Interface
1	GND	Ground	Power
2	GND	Ground	Power
3	UART RX	UART RX, receive to MCU from DB	UART
4	UART CTS	UART Clear to send	UART
5	UART TX	UART TX, transmit from MCU to DB	UART
6	UART RTS	UART Ready to send	UART
7	I^2C SCL	Clock line for I^2C interface.	I^2C
8	STBY/RST	Standby/Reset control	GPIO
9	I^2C SDA	Data line for I^2C interface.	I^2C
10	Audio WS/LRCLK	Audio Word Select/Left Right Clock	I^2S
11	Audio In	Audio into MCU, out from codec	I^2S
12	Audio CLK	Audio clock	I^2S
13	Audio out	Audio out of MCU, into codec/DAC	I^2S
14	REFCLK/MCLK	Reference/Master clock	MCLK
15	GND	Ground	Power
16	GND	Ground	Power
17	NC	Legacy hold over	-
18	+3.3v	VDD	Power
19	NC	Legacy hold over	-
20	+5.0v	VDD	Power
21 (1)	Audio WS/ Audio LRCLK	Audio Word Select/Left Right Clock	I^2S
22 (2)	Card ID pin	Communication line to the daughter card and EDBG	Connected to EDBG
23 (3)	Audio CLK	Audio Clock	I^2S
24 (4)	NC	-	-
25 (5)	Audio IN	Audio into MCU, out from codec	I^2S
26 (6)	NC	-	-
27 (7)	Audio OUT	Audio out of MCU, into codec/DAC	I^2S
28 (8)	NC	-	-
29 (9)	REFCLK2/MCK2	Reference clock #2	REFCLK
30 (10)	NC	-	-
31 (11)	GND	Ground	Power

© 2021 Microchip Technology Inc.
and its subsidiaries

.....continued			
Pin Number	**Name**	**Description**	**Interface**
32 (12)	GND	Ground	Power

1.4.2 Port Connections

The following table provides port connections to the X32 audio interface.

Table 1-4. Port Connections

Interface	MCU Pin for X32
UART RX	PA09
UART TX	PA10
UART RTS	PA26
UART CTS	PA25
I^2C SDA	PB10
I^2C SCL	PB11
Reset	PA30
REFCLK	PA18 or PA04(1)
I^2S Clock	PA00
I^2S Audio Out (MOSI)	PA03
I^2S Audio In (MISO)	PA02
I^2S LRCLK	PA01

Note:

1. PA18 or PA04 is selected through an MCLK jumper. For additional information, refer to the Board Feature Location, and MCLK Select Jumper.

1.5 mikroBUS

The mikroBUS interface enables using additional Click boards. For additional information, and to see the boards which can be used with this development board, refer to https://www.mikroe.com/.

Table 1-5. mikroBUS™ Pinout

Pin Number	Name	Function
1	GND	Ground
2	+5V	+5.0V
3	SDA	I^2C SDA
4	SCL	I^2C SCL
5	TX	UART TX
6	RX	UART RX
7	INT	Interrupt request line
8	PWM	Pulse-Width Modulation
9	GND	Ground

.....continued		
Pin Number	**Name**	**Function**
10	+3.3V	Ground
11	MOSI	Host Out Client In line of Serial Peripheral Interface (SPI)
12	MISO	Host In Client Out line of SPI
13	SCK	Clock for SPI
14	CS	Chip Select for SPI (Active low)
15	RST	Reset
16	ADC	Analog-to-Digital Converter

1.5.1 Port Connections

The mikroBUS interface shares signals with the X32 audio interface, refer to the previous table for additional information on pinout or signal probing.

Table 1-6. Port Connections for the mikroBUS Interface

Interface	Port Pin for mikroBUS™
UART RX	PA09
UART TX	PA10
INT/IRQ	PB03
I^2C SDA	PB10
I^2C SCL	PB11
Reset	PA30
PWM	PA23
SPI Clock	PA14
SPI MOSI	PA13
SPI MISO	PA12
SPI SS	PA05
ADC	PA19

1.6 Xplained Pro Extension Standard Header

The SAM G55 Curiosity Audio Board has an Xplained Pro extension compatible interface that enables using existing extension boards. This interface consists of a dual row, 20-pin, 100 mil, 90 degree extension male header. Xplained Pro extensions have their female counterparts. The extension headers can be used to connect a variety of Xplained Pro extension boards, or to access the pins of the target MCU directly. All connected pins follow the defined pinout description as shown in the following table.

Note: All pins are not always connected.

Table 1-7. Interface Pinout

Pin number	Name	Description	Port
1	ID	Communication line to the ID chip on an extension board.	Connected to EDBG
2	GND	Ground.	-

.....continued			
Pin number	**Name**	**Description**	**Port**
3	ADC(+)	Analog-to-Digital Converter (ADC), alternatively positive part of differential ADC.	PA17
4	ADC(-)	ADC, alternatively negative part of differential ADC.	PA18
5	GPIO1	General purpose I/O.	PA26
6	GPIO2	General purpose I/O.	PA25
7	PWM(+)	Pulse-Width Modulation (PWM), alternatively positive part of differential PWM.	PA00
8	PWM(-)	PWM, alternatively negative part of differential PWM.	PA23
9	IRQ/INT/GPIO	Interrupt request line and general purpose I/O.	PA24
10	SPI $\overline{SS}$ B/GPIO	SPI Client Select or General purpose I/O.	PA29
11	I^2C SDA	Data line for I^2C interface. Always implemented, bus type.	PB10
12	I^2C SCL	Clock line for I^2C interface. Always implemented, bus type.	PB11
13	UART RX	Receiver line of target device UART.	PA09
14	UART TX	Transmitter line of target device UART.	PA10
15	SPI $\overline{SS}$ A/GPIO	SPI Client Select or General purpose I/O.	PA11
16	SPI MOSI	Host Out Client In line of SPI. Always implemented, bus type.	PA13
17	SPI MISO	Host In Client Out line of SPI. Always implemented, bus type.	PA12
18	SPI SCK	Clock for SPI. Always implemented, bus type.	PA14
19	GND	Ground.	-
20	VCC	Power for extension boards (3.3V).	-

Figure 1-2. Pinout Schematic

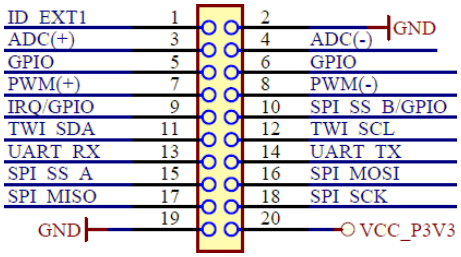

1.7 Buttons and LEDs

The SAM G55 Curiosity Audio Board offers several user buttons and LEDs. The following table provides the function, description, and port on the MCU.

Table 1-8. Functions for Buttons and LEDs

Function	Description	Type	Port
SW1	User switch	Input	PB15
SW2	User switch	Input	PB14

.....continued			
Function	**Description**	**Type**	**Port**
RESET	Hard reset of the G55	Input	-
LED1	User programmable LED, green	Input	PA06
LED2	User programmable LED, yellow	Input	PA15

1.8 USB

One USB is available on the SAM G55 Curiosity Audio Board that can act as Host and device. It has a micro USB connector with the silk screen TARGET USB.

Table 1-9. USB Connections

Pin on SAM G55	USB
PA22	DP
PA21	DM
PB02	USB ID

1.9 Strapping Options

The SAM G55 Curiosity Audio Board contains two jumpers that can be used to configure the functionality of the board. The jumpers can be located in the Figure 1-1.

1.9.1 Chip Erase Jumper

When this jumper is placed on the CHIPERASE header, the SAM G55 performs a chip erase after the next power toggle of the board. For normal operation, this jumper must be placed such that only one of the pins of the CHIPERASE header is connected, and no contact is made between the two pins.

1.9.2 MCLK Select Jumper

The I^2S interface (1.4) can use one of two sources for its MCLK signal, either PA18 (GCLK output) or PA04 (I^2S interface).

© 2021 Microchip Technology Inc.
and its subsidiaries

2. Hardware

2.1 Schematics

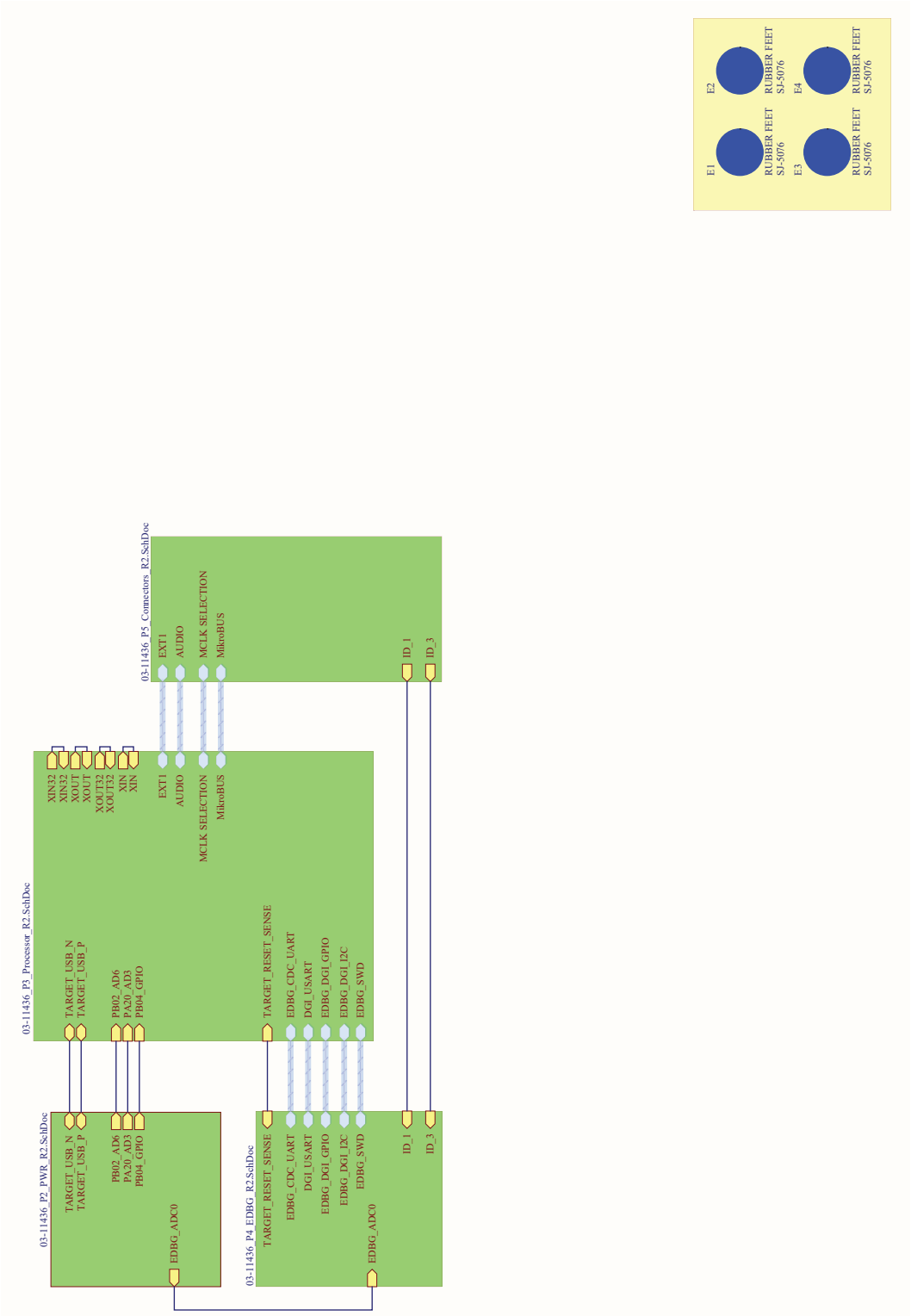

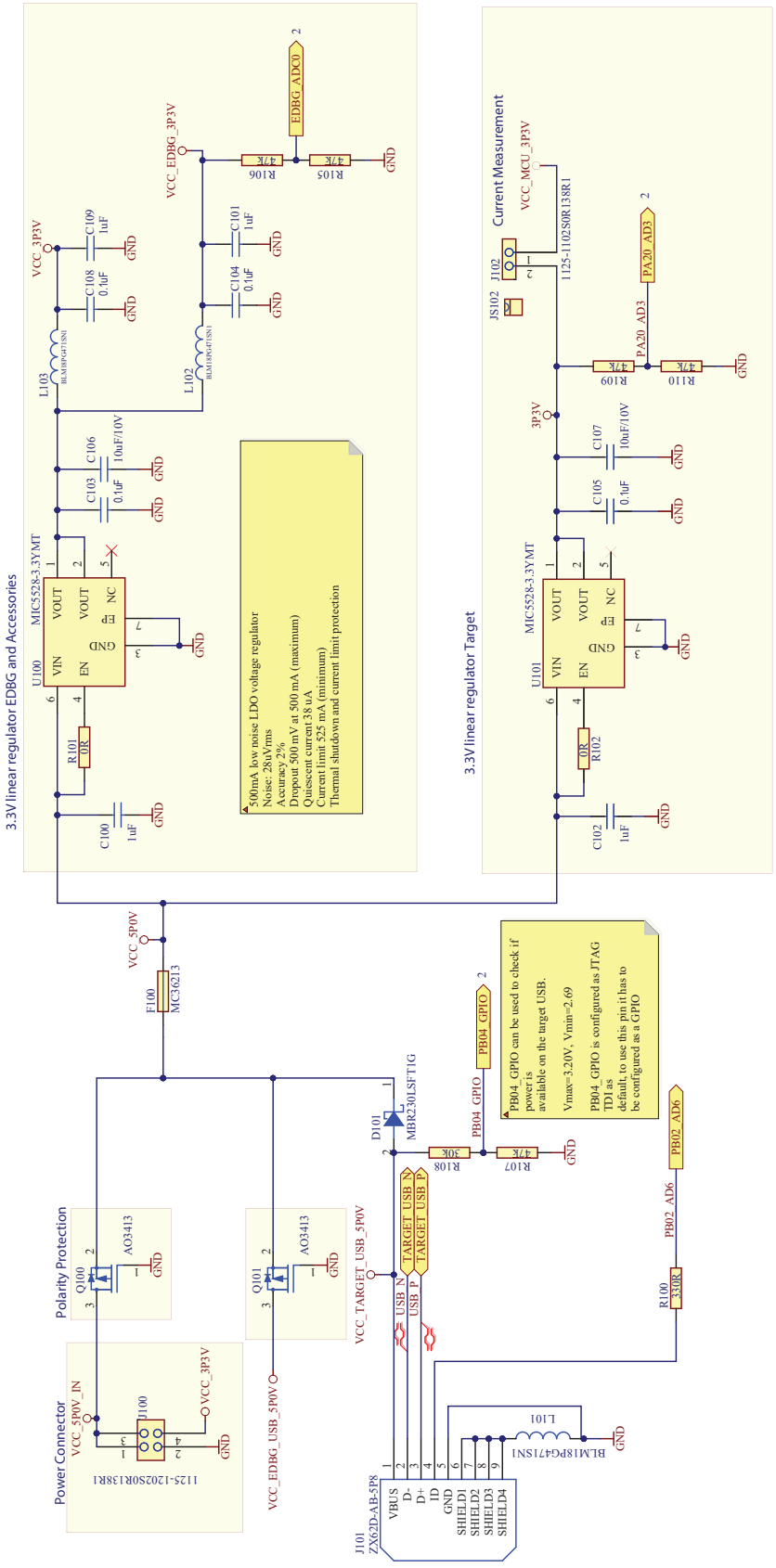
3.3V linear regulator EDBG and Accessories
3.3V linear regulator Target
Current Measurement
Power Connector
Polarity Protection
500mA low noise LDO voltage regulator
Noise: 28uVrms
Accuracy 2%
Dropout 500 mV at 500 mA (maximum)
Quiescent current 38 uA
Current limit 525 mA (minimum)
Thermal shutdown and current limit protection
PB04_GPIO can be used to check if power is available on the target USB.
Vmax=3.20V, Vmin=2.69
PB04_GPIO is configured as JTAG TDI as default, to use this pin it has to be configured as a GPIO
VCC_3P3V
VCC_EDBG_3P3V
VCC_MCU_3P3V
VCC_5P0V
VCC_TARGET_USB_5P0V
VCC_EDBG_USB_5P0V
VCC_5P0V_IN
EDBG_AD0
PA20_AD3
PB02_AD6
PB04_GPIO
TARGET_USB_N
TARGET_USB_P
USB_N
USB_P
MIC5528-3.3YMT
MBR230LSFT1G
MC36213
AO3413
1125-1102S0R138R1
1125-1202S0R138R1
ZX62D-AB-5P8
BLM18PG471SN1
GND

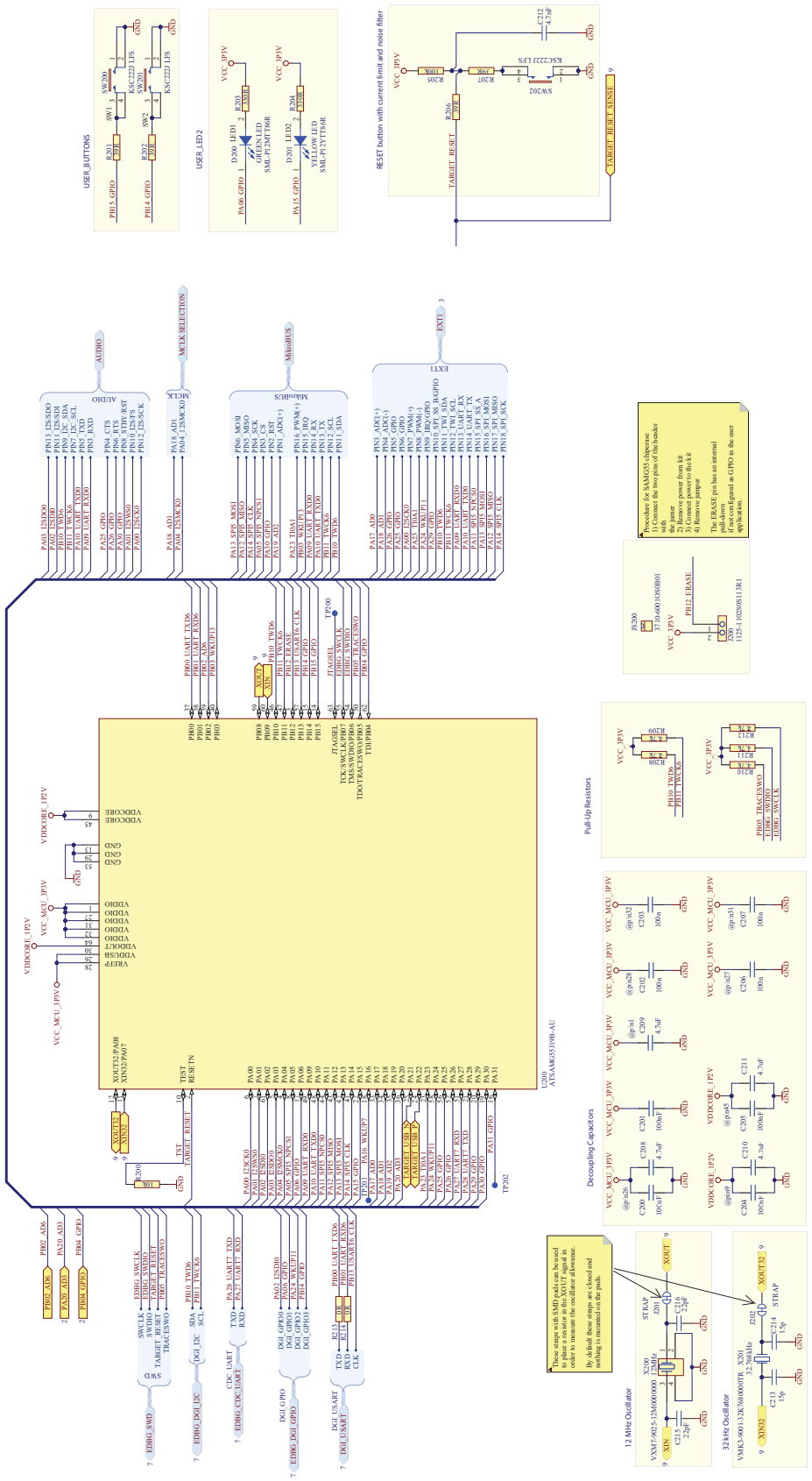

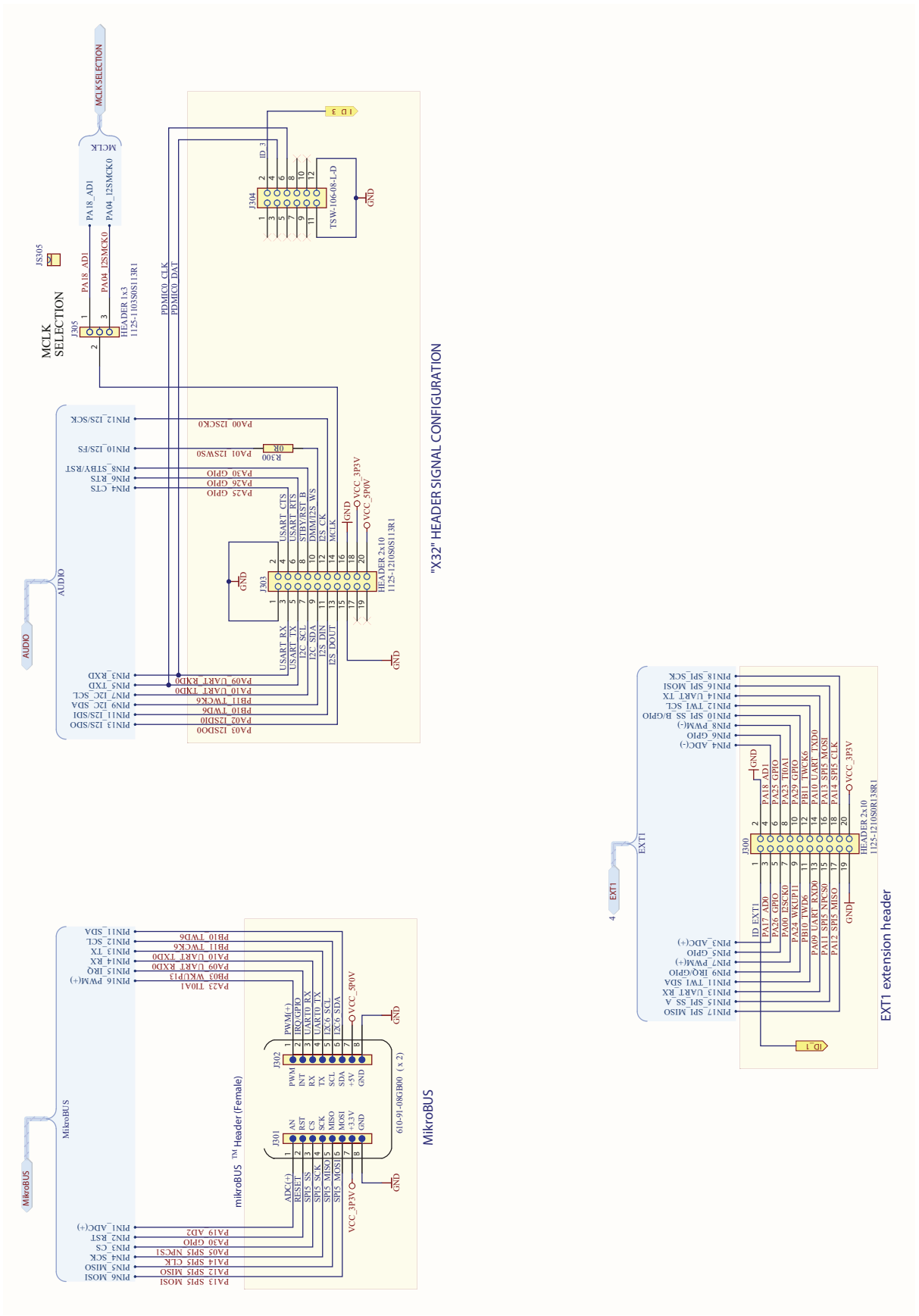
"X32" HEADER SIGNAL CONFIGURATION
MCLK SELECTION
AUDIO
MikroBUS
mikroBUS ™ Header (Female)
EXT1 extension header

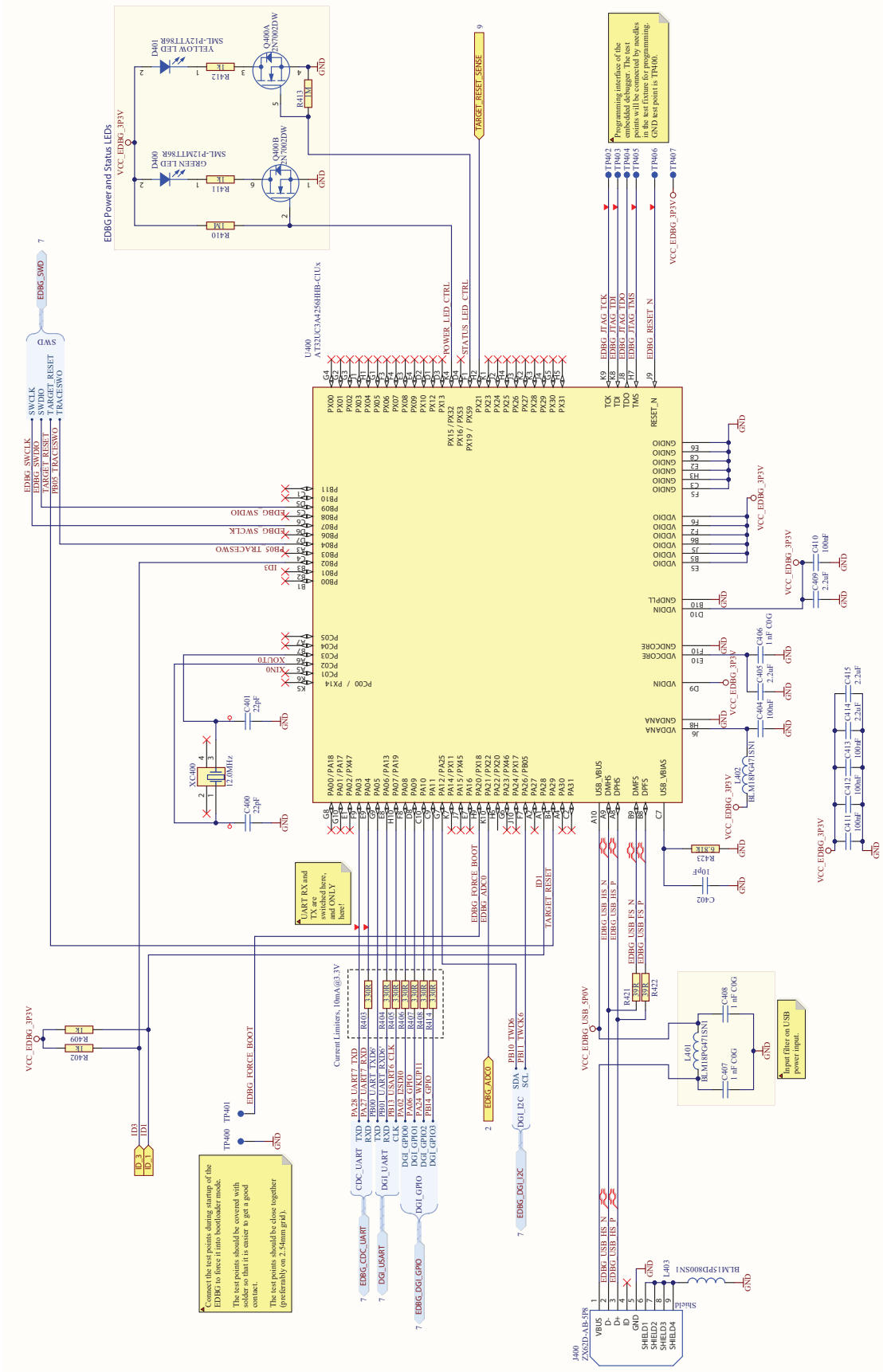

2.2 Layer Plots

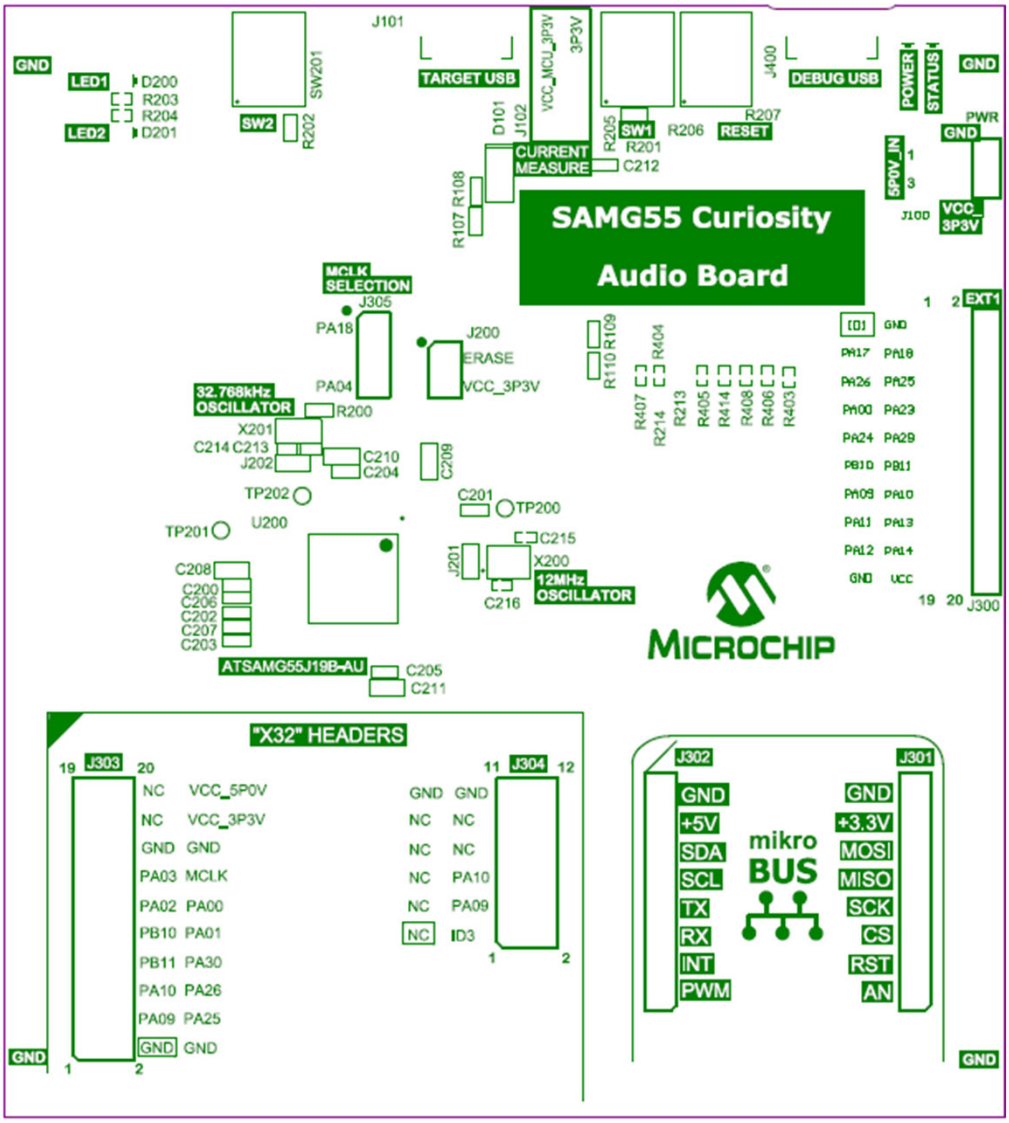

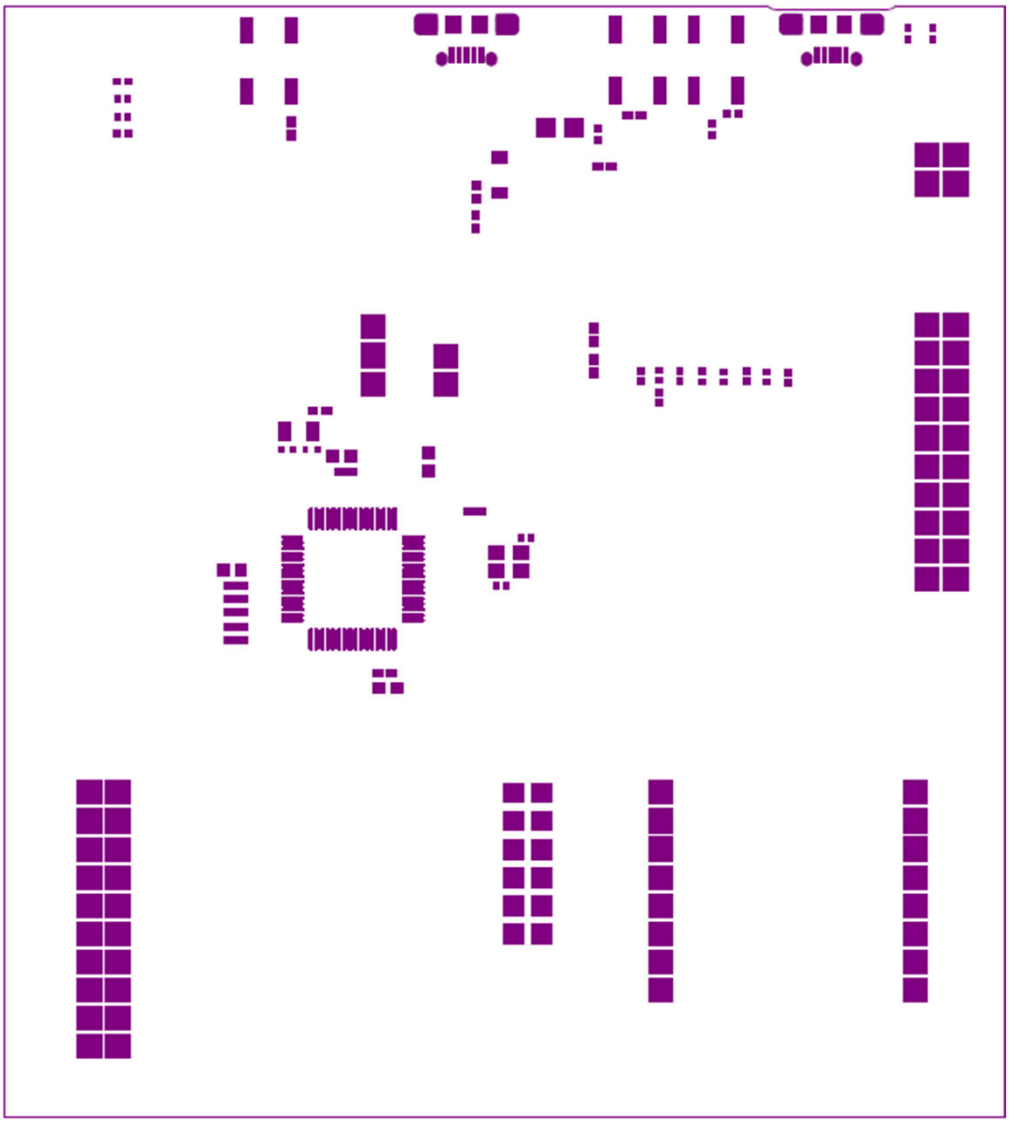

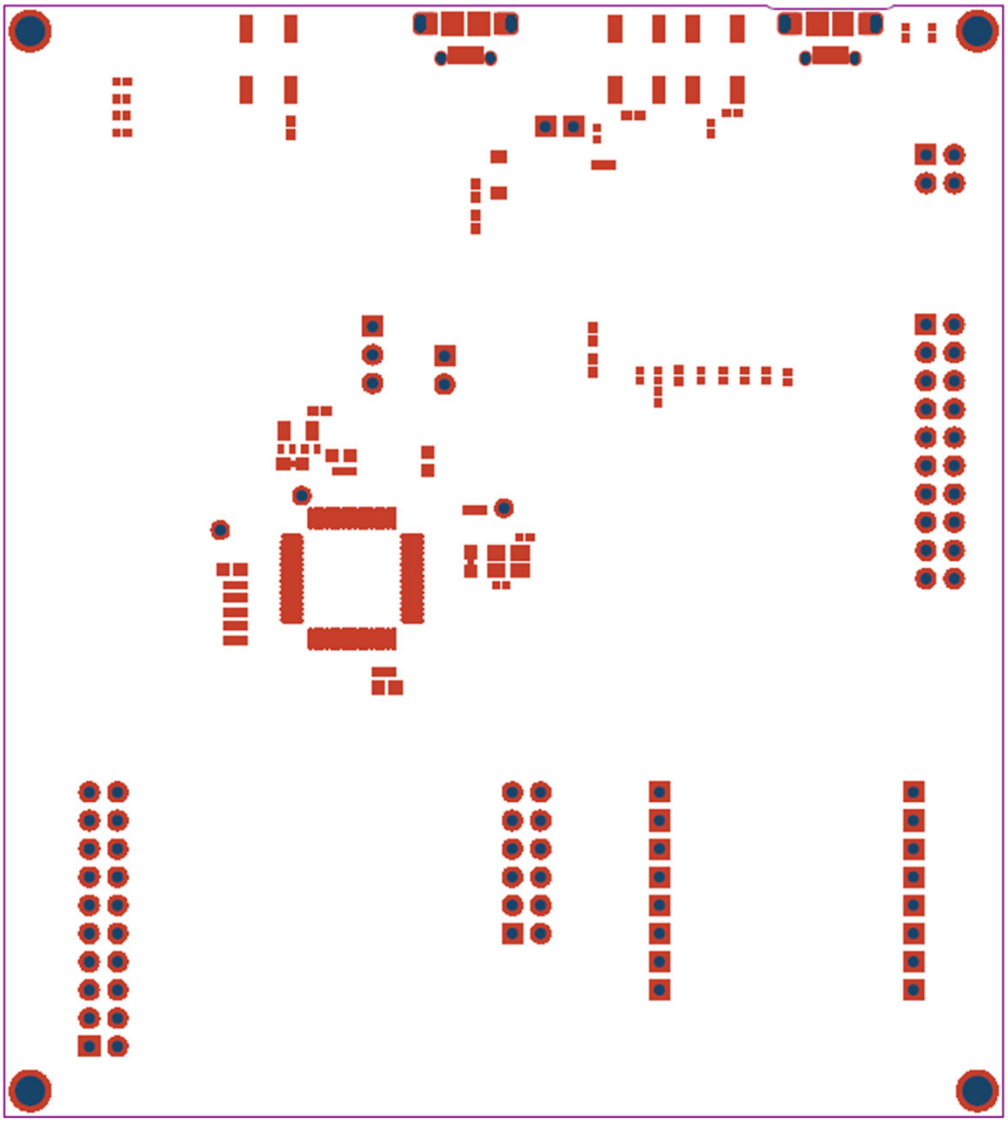

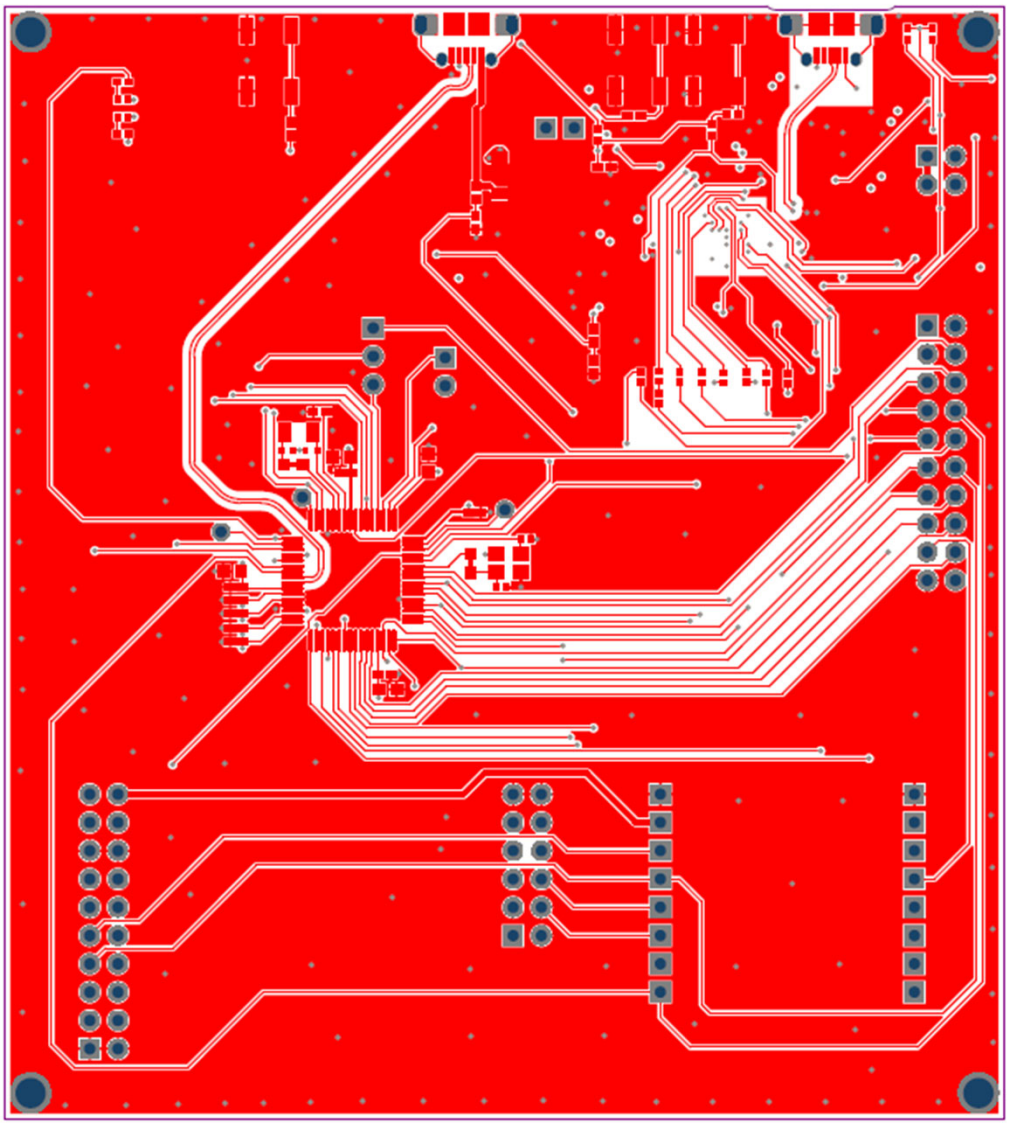

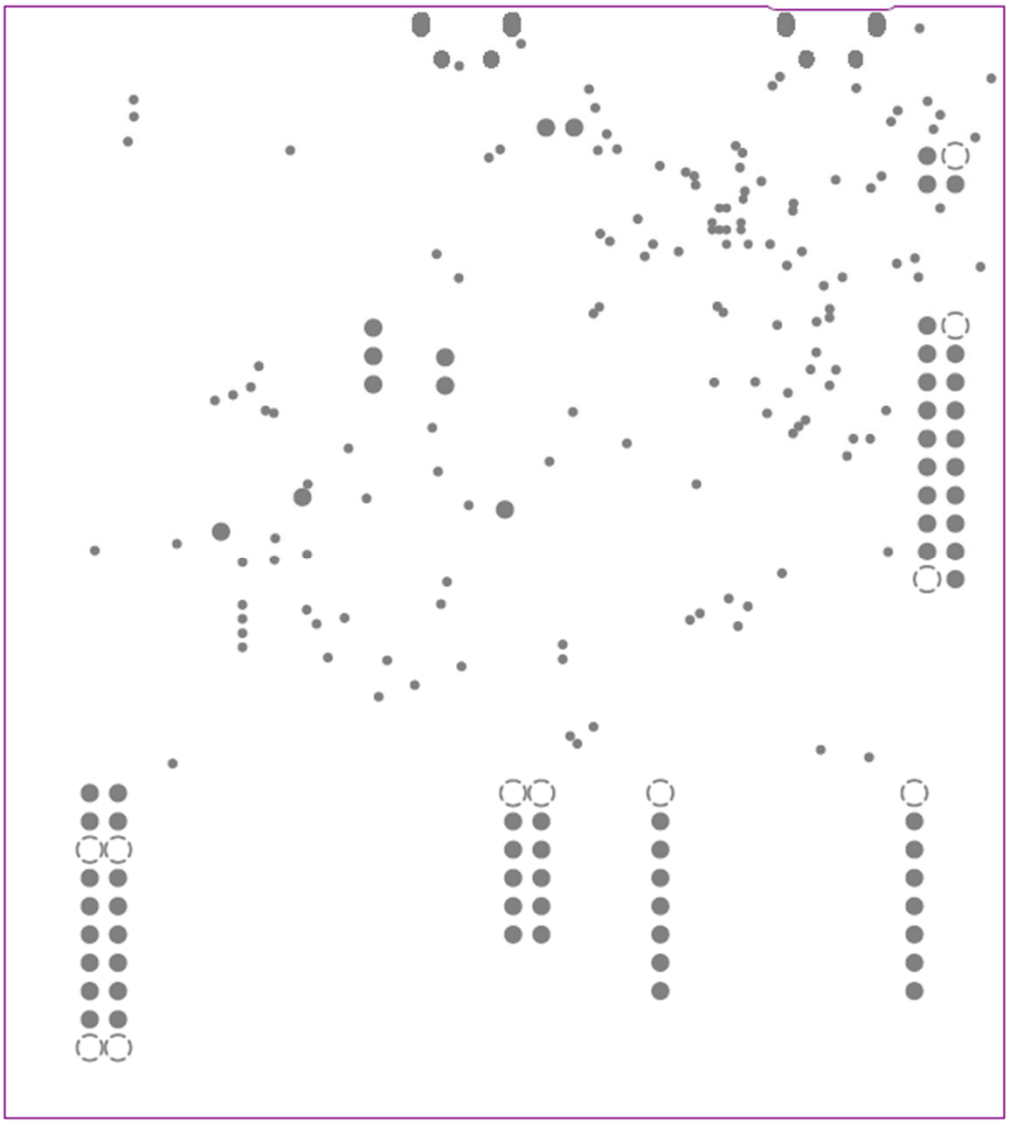

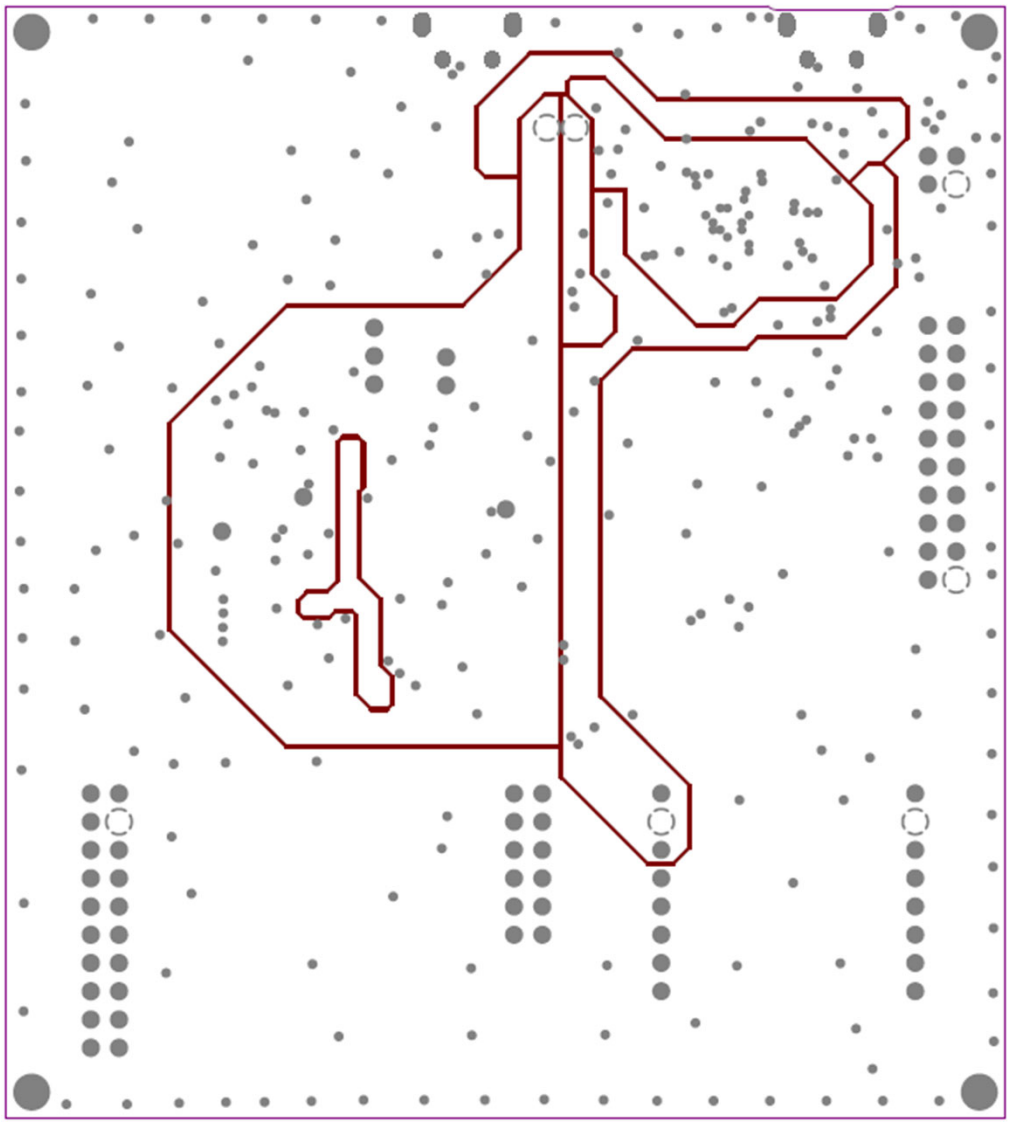

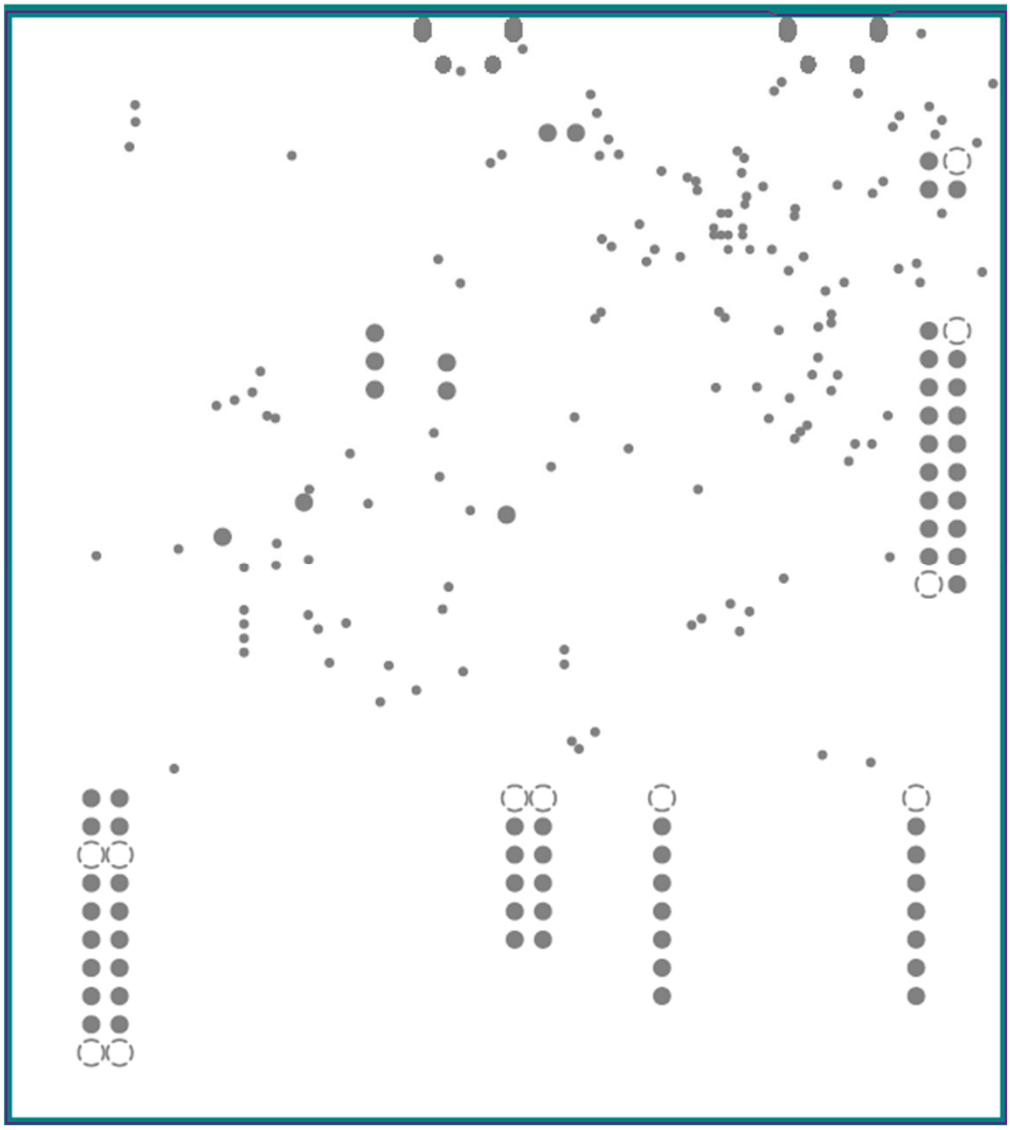

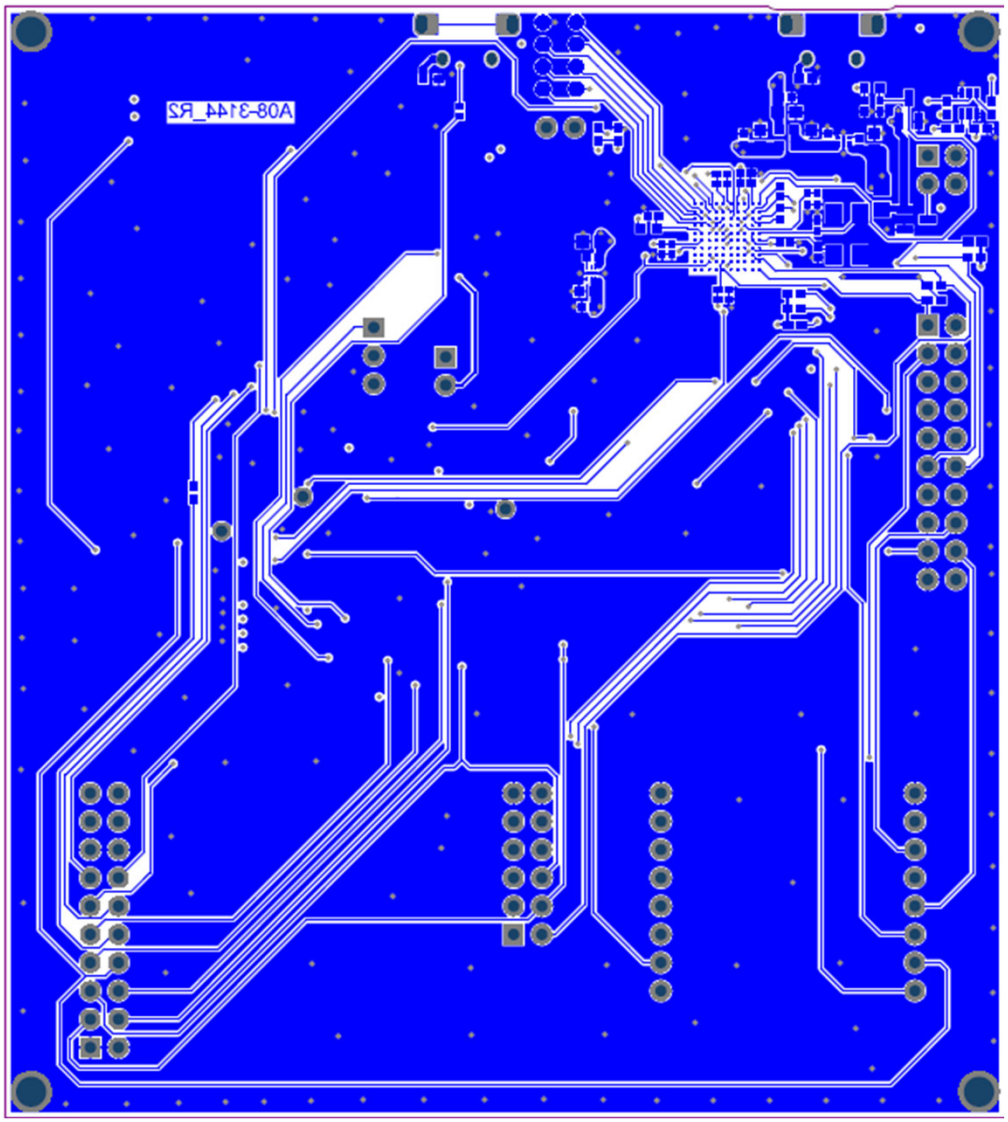
A08-3144_R2

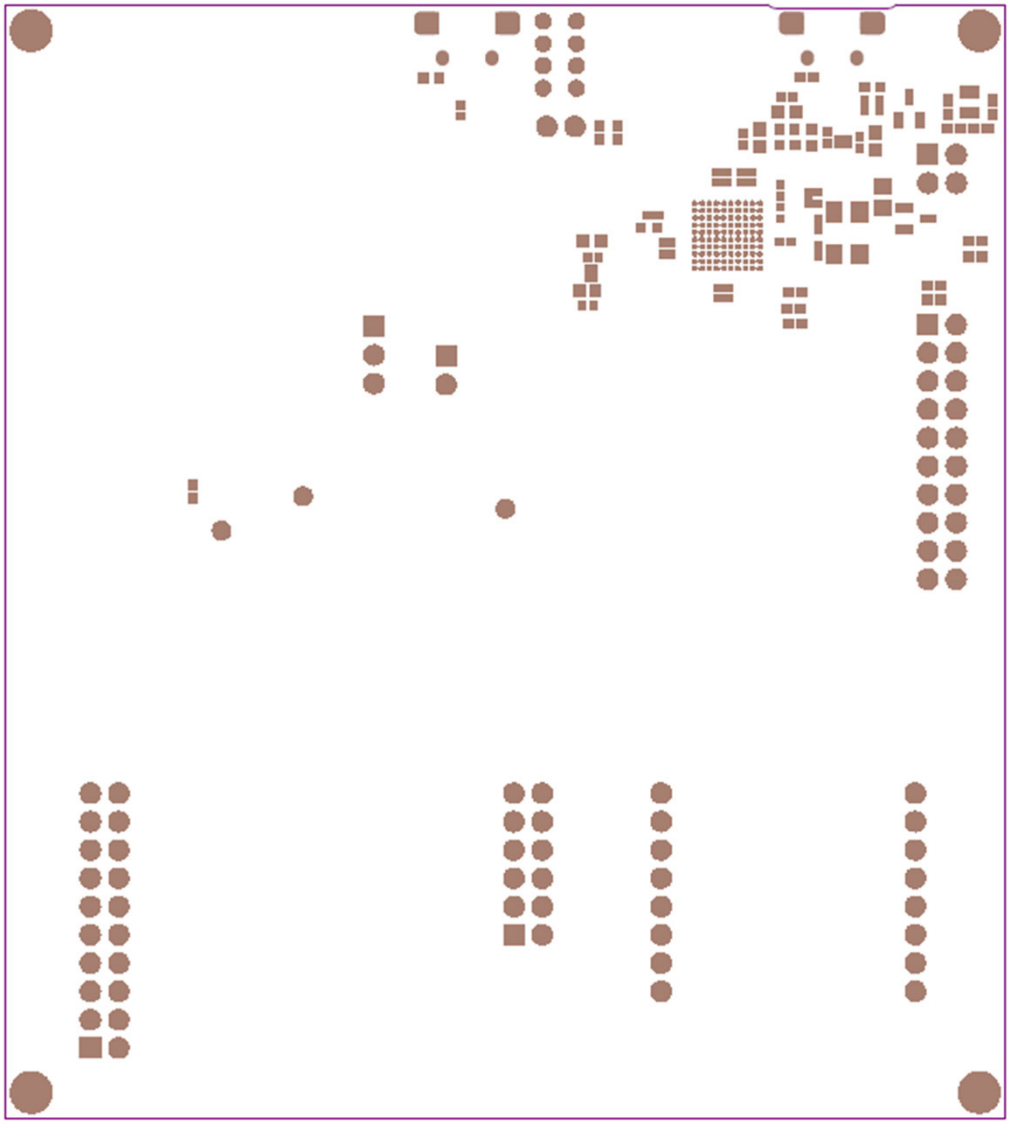

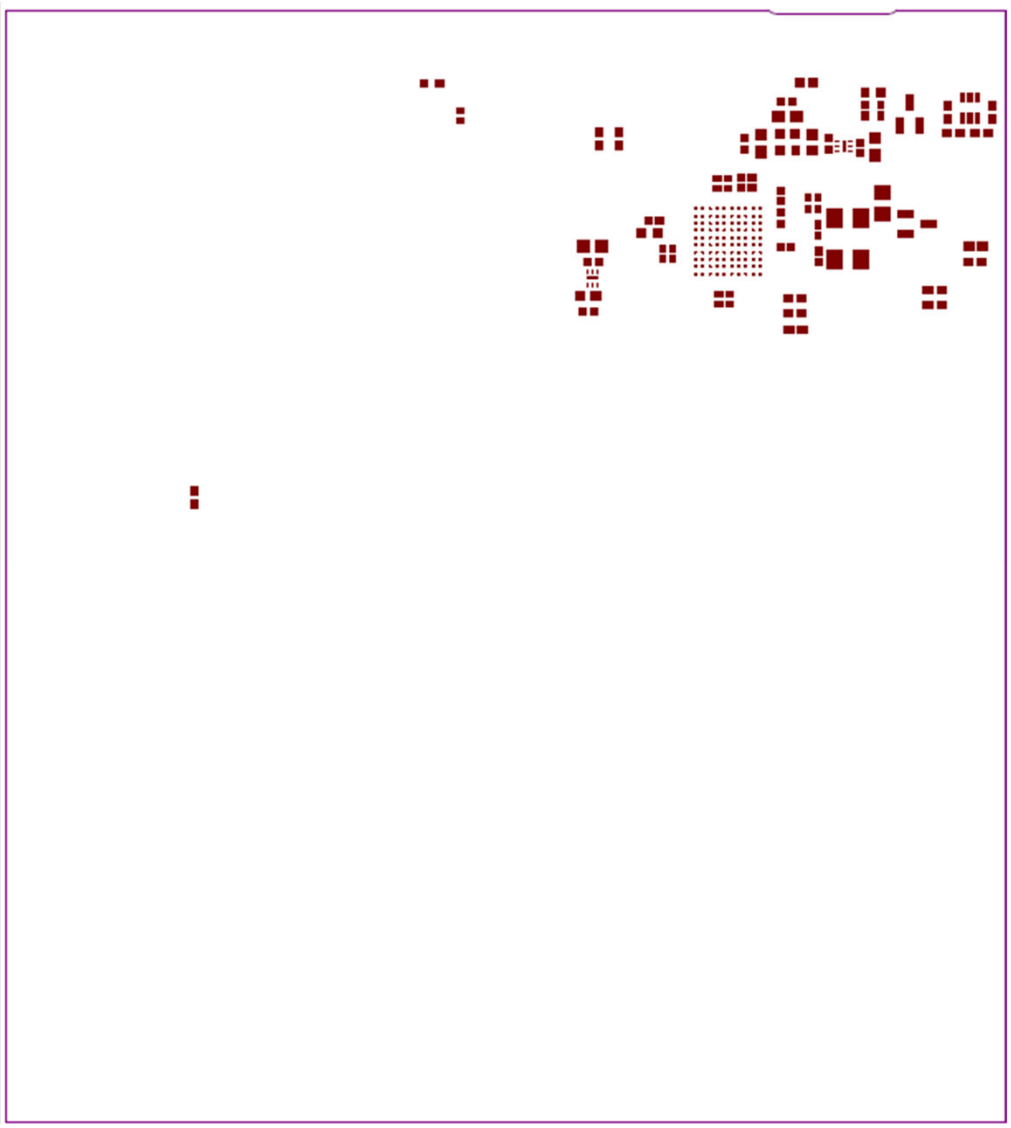

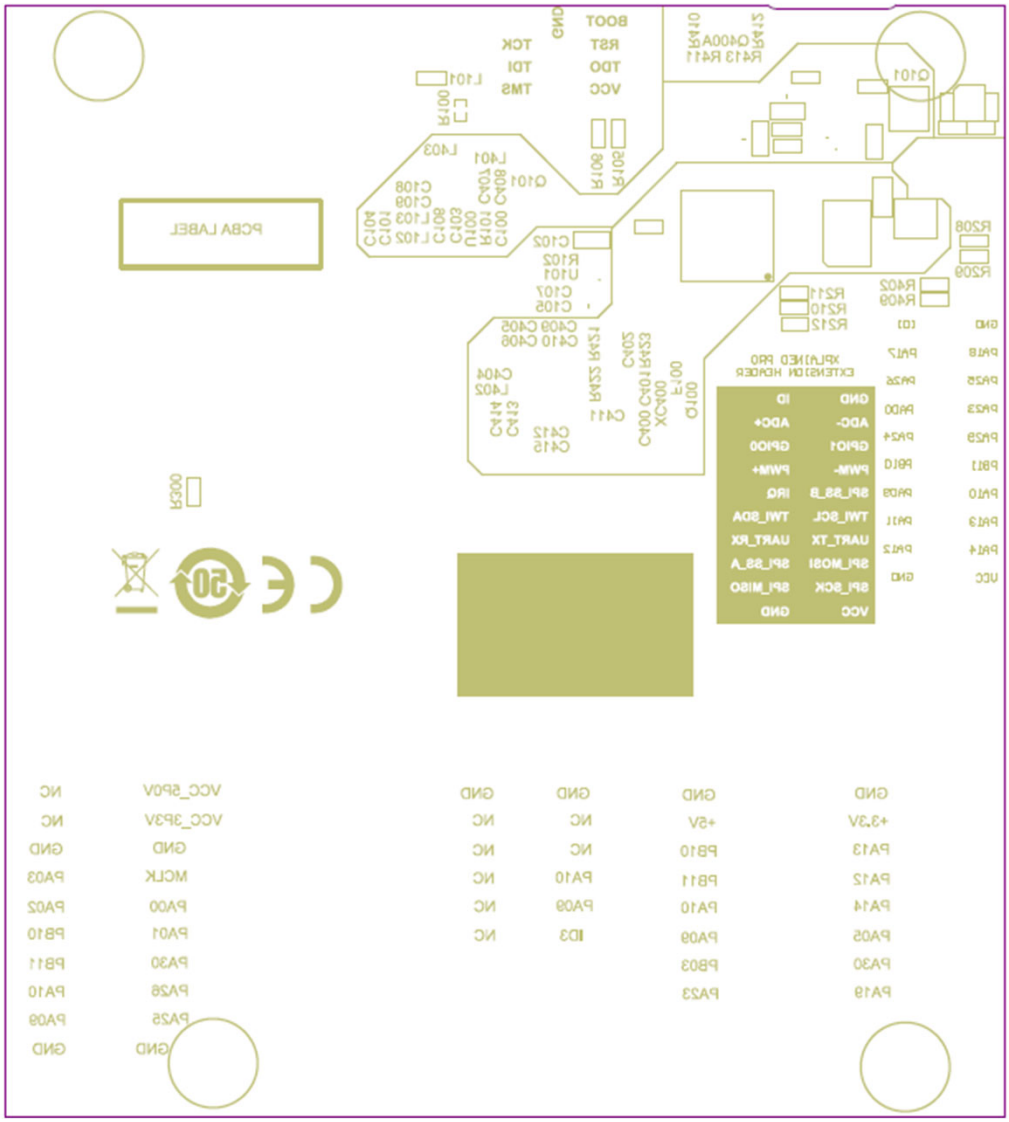

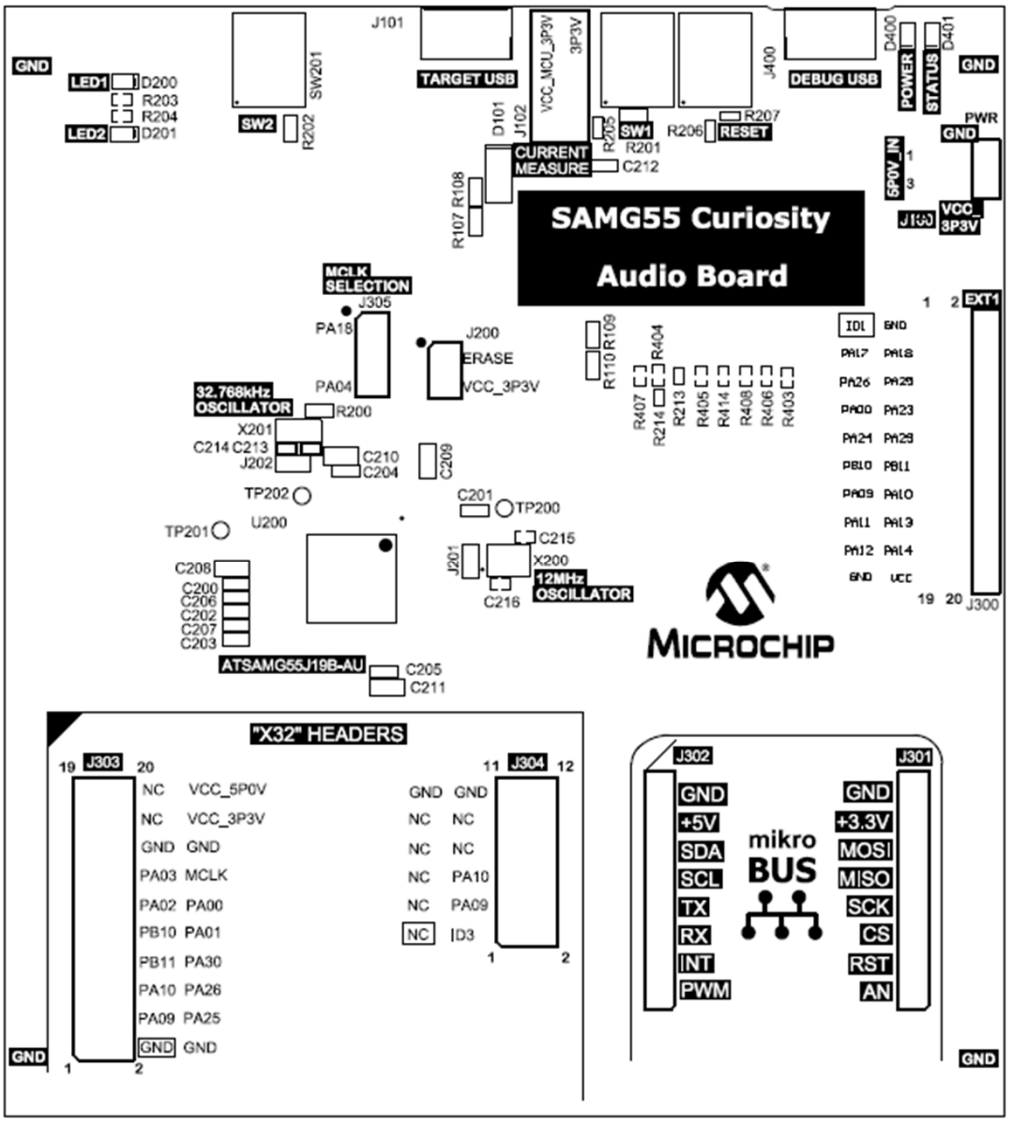
SAMG55 Curiosity
Audio Board
GND
LED1
D200
R203
R204
LED2
D201
SW2
R202
SW201
J101
TARGET USB
VCC_MCU_3P3V
3P3V
D101
J102
CURRENT MEASURE
R205
SW1
R201
R206
R207
RESET
C212
J400
DEBUG USB
D400
POWER
STATUS
D401
PWR
5P0V_IN
VCC_3P3V
R107
R108
MCLK SELECTION
J305
PA18
PA04
J200
ERASE
VCC_3P3V
32.768kHz OSCILLATOR
R200
X201
C214
C213
J202
C210
C204
C209
TP202
TP201
U200
C201
TP200
C215
X200
J201
C216
12MHz OSCILLATOR
C208
C200
C206
C202
C207
C203
ATSAMG55J19B-AU
C205
C211
R110
R109
R404
R407
R214
R213
R405
R414
R408
R406
R403
EXT1
J300
MICROCHIP
"X32" HEADERS
J303
NC VCC_5P0V
NC VCC_3P3V
GND GND
PA03 MCLK
PA02 PA00
PB10 PA01
PB11 PA30
PA10 PA26
PA09 PA25
GND GND
J304
GND GND
NC NC
NC NC
NC PA10
NC PA09
NC ID3
J302
GND
+5V
SDA
SCL
TX
RX
INT
PWM
mikro BUS
J301
GND
+3.3V
MOSI
MISO
SCK
CS
RST
AN

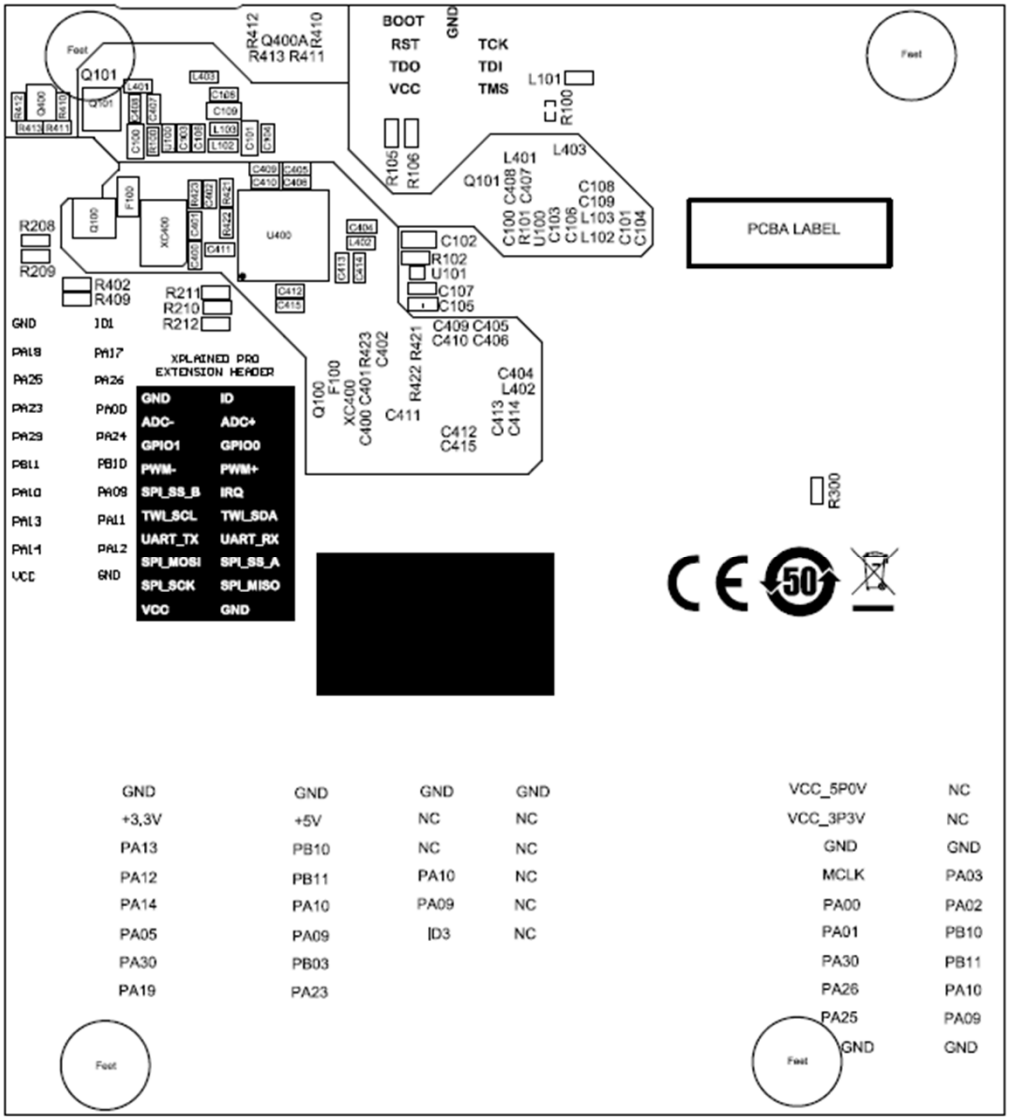
BOOT
RST
TDO
VCC
GND
TCK
TDI
TMS
PCBA LABEL
XPLAINED PRO
EXTENSION HEADER
GND ID
ADC- ADC+
GPIO1 GPIO0
PWM- PWM+
SPI_SS_B IRQ
TWL_SCL TWL_SDA
UART_TX UART_RX
SPI_MOSI SPI_SS_A
SPI_SCK SPI_MISO
VCC GND
GND GND GND GND
+3,3V +5V NC NC
PA13 PB10 NC NC
PA12 PB11 PA10 NC
PA14 PA10 PA09 NC
PA05 PA09 ID3 NC
PA30 PB03
PA19 PA23
VCC_5P0V NC
VCC_3P3V NC
GND GND
MCLK PA03
PA00 PA02
PA01 PB10
PA30 PB11
PA26 PA10
PA25 PA09
GND GND

2.3 Bill of Materials

Quantity	Designator	Description	Value
4	C100, C101, C102, C109	CAP CER 1 uF 16V 10% X5R 0603	1 uF
4	C103, C104, C105, C108	CAP CER 0.1 uF 50V 10% X7R 0402	0.1 uF
2	C106, C107	Ceramic capacitor, SMD 0603, X5R, 10V, 10 uF Â± 20%	10uF/10V
13	C200, C201, C202, C203, C204, C205, C206, C207, C404, C410, C411, C412, C413	Ceramic capacitor, SMD 0402, X7R, 16V, +/-10%	100n
4	C208, C209, C210, C211	Ceramic capacitor, SMD 0603, X5R, 10V, Â±10 %	4.7uF
1	C212	Ceramic capacitor, SMD 0402, X7R, 25V, +/-10% (de35287)	4.7n
2	C213, C214	Ceramic capacitor, 5.6 pF, SMD 0402, C0G, 50V, +/-0.25pF	5.6 pF
2	C215, C216	Ceramic capacitor, SMD 0402, NP0, 50V, 5%	22 pF
2	C400, C401	Ceramic capacitor, SMD 0402, NP0, 50V, +/-5%	22p
1	C402	Ceramic capacitor, SMD 0402, NP0, 50V, +/-5%	10p
4	C405, C409, C414, C415	Ceramic capacitor, SMD 0402, X5R, 6.3V, +/-20%	2.2uF
3	C406, C407, C408	Ceramic capacitor, SMD 0402, C0G, 50V, +/-5%	1 nF C0G
1	D101	2A, 30V,Vf=0.43V, Schottky diode ,SOD-123FL	MBR230LSFT1
2	D200, D400	LED, SMD 0402, Green, Wave length = 569 nm, 2.1 mcd @ (1mA, 1.9Vf)	SML-P11MT
2	D201, D401	LED, SMD 0402, Yellow, Wave length = 586 nm, 7.6mcd @ (1mA, 1.9Vf)	SML-P11YT
4	E1, E2, E3, E4	2.8 mm adhesive feet,diam 8.0 mm	SJ-5076
1	F100	Resetable PTC fuse, Ih = 0.5A, It = 1.0A, 0805 package	MC36213
1	J100	Pin header, 2x2, Right Angle, 2.54 mm, THT, Pin In Paste	1125-1202S0R138R1
2	J101, J400	Micro USB AB Connector, Standard SMT + DIP	ZX62D-AB-5P8
1	J102	1x2 pin header, right angle, 2.54 mm pitch, through-hole	Pin header 1x2 RA
1	J200	1x2 pin header, 2.54 mm pitch, THM	MTSW-102-08-L-S-276
1	J300	Pin header, 2x10, Right Angle, 2.54 mm, THM, Pin In Paste	P101-2*10RGF-139-ND
2	J301, J302	PINREX, 2.54 mm 1x8 Female Header Straight, THM, H = 8.5 mm, Au Flash	610-91-08GB00
1	J303	2x10 pin header, 2.54 mm pitch, Pin-in-Paste THM, 1 mm hole	HMTSW-110-23-F-D-237
1	J304	2x6 pin header, 2.54 mm pitch, Pin-in-Paste, 1mm hole	HMTSW-106-23-F-D-237
1	J305	1x3 pin header, 2.54 mm pitch, Pin-in-Paste THM, 1mm hole	HMTSW-103-23-F-S-237
3	JS102, JS200, JS305	Jumper cap for 2.54 mm pin header	SNT-100-BK-G
5	L101, L102, L103, L401, L402	SMD Ind 0603. Z = 470 Ohm (@100 MHz), Max R(dc) = 0.20 Ohm, Imax = 1A (@100MHz)	BLM18PG471SN1
1	L403	FERRITE CHIP 80 OHM 1500MA 0402	BLM15PD800SN1
2	Q100, Q101	P-CH MOSFET, SOT-23, 20V, 3A, Rds(on) = 0.097 mOhm@3A, 4.5V	AO3413
1	Q400	Dual N-Channel MOSFET, 60V, 115 mA cont,RDS(ON) < 7.5 Ohm @50 mA@5V, SOT-363	2N7002DW
10	R100, R203, R204, R403, R404, R405, R406, R407, R408, R414	Thick film resistor, SMD 0402, 1/16W, 1%	330R

.....continued

Quantity	Designator	Description	Value
5	R101, R102, R213, R214, R300	RES 0.0 OHM 1/16W 0402 SMD	0R
5	R105, R106, R107, R109, R110	Thick film resistor, SMD 0402, 1/16W, 1%	47k
1	R108	Thick film resistor, SMD 0402, 1/16W, 1%	30k
1	R200	Thick film resistor, SMD 0402, 1/16W, 1%	10k
6	R201, R202, R206, R207, R421, R422	Thick film resistor, SMD 0402, 1/16W, 1%	39R
1	R205	Thick film resistor, SMD 0402, 1/16W, 1%	100k
5	R208, R209, R210, R211, R212	Thick film resistor, SMD 0402, 1/16W, 1%	4.7k
4	R402, R409, R411, R412	Thick film resistor, SMD 0402, 1/16W, 1%	1k
2	R410, R413	Thick film resistor, SMD 0402, 1/16W, 1%	1M
1	R423	Thick film resistor, SMD 0402, 1/16W, 1%	6.81k
3	SW200, SW201, SW202	SWITCH, SMD-J-LEAD, 200 gf, L6.2W6.2H3.5	KSC222J LFS
2	U100, U101	LDO 3.3V 0.5A 6TDFN	MIC5528-3.3YMT
1	U200	ATSAMG55J19B-AU LQFP 64 pack	ATSAMG55J19B-AU
1	U400	AT32UC3A4256HHB	AT32UC3A4256HHB-C1Ux
1	X200	Crystal, 12.0 MHz, CL=12.0 pF, ESR = 100 Ohm, SMD LxW = 3.2 x 2.5 mm, 30 ppm	12MHz
1	X201	Crystal, 32.768 kHz, CL = 9.0 pF, ESR = 70 kOhm, SMD LxW = 3.2 x 1.5 mm, 20 ppm	32.768kHz
1	XC400	Fox FQ5032B 12.0 MHz SMD crystal 738B-12	12.0MHz

© 2021 Microchip Technology Inc.
and its subsidiaries

2.4 Board Dimensions

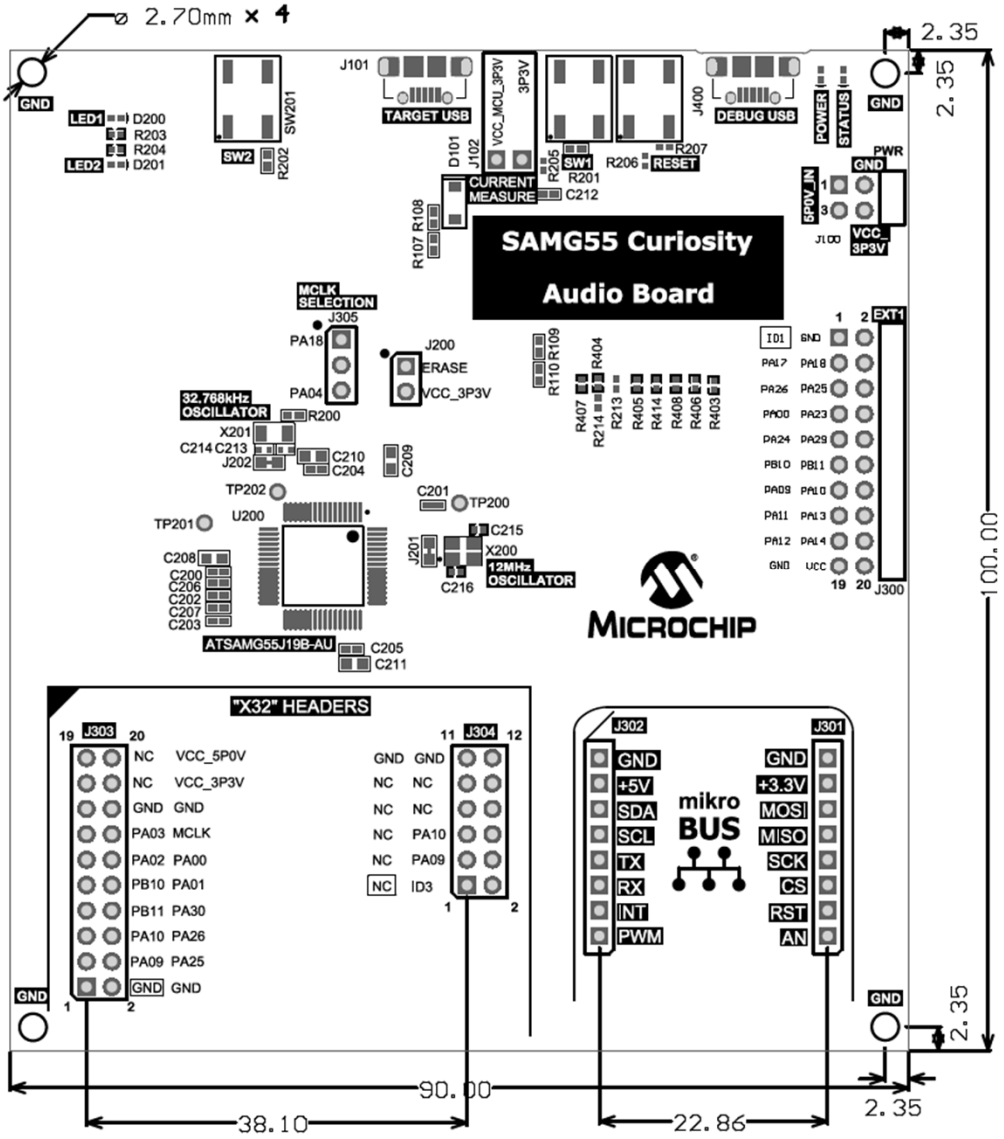

2.5 Hardware Revision History

Rev 1.0
October 2021

3. References

The following documents may provide further information for the SAM G55 product. For further information, please visit the Microchip Website, or speak with a local Microchip sales representative.

- SAM G55 Series Data Sheet:
  ww1.microchip.com/downloads/en/DeviceDoc/Atmel-11289-32-bit-Cortex-M4-Microcontroller-SAM-G55_Datasheet.pdf
- SAM G55 Series Silicon Errata and Data Sheet Clarifications:
  ww1.microchip.com/downloads/en/DeviceDoc/80000844D.pdf

© 2021 Microchip Technology Inc.
and its subsidiaries

4. Revision History

Revision A - 12/2021
This is the initial release of this document.

The Microchip Website

Microchip provides online support via our website at www.microchip.com/. This website is used to make files and information easily available to customers. Some of the content available includes:

- **Product Support** – Data sheets and errata, application notes and sample programs, design resources, user's guides and hardware support documents, latest software releases and archived software
- **General Technical Support** – Frequently Asked Questions (FAQs), technical support requests, online discussion groups, Microchip design partner program member listing
- **Business of Microchip** – Product selector and ordering guides, latest Microchip press releases, listing of seminars and events, listings of Microchip sales offices, distributors and factory representatives

Product Change Notification Service

Microchip's product change notification service helps keep customers current on Microchip products. Subscribers will receive email notification whenever there are changes, updates, revisions or errata related to a specified product family or development tool of interest.

To register, go to www.microchip.com/pcn and follow the registration instructions.

Customer Support

Users of Microchip products can receive assistance through several channels:

- Distributor or Representative
- Local Sales Office
- Embedded Solutions Engineer (ESE)
- Technical Support

Customers should contact their distributor, representative or ESE for support. Local sales offices are also available to help customers. A listing of sales offices and locations is included in this document.

Technical support is available through the website at: www.microchip.com/support

Microchip Devices Code Protection Feature

Note the following details of the code protection feature on Microchip products:

- Microchip products meet the specifications contained in their particular Microchip Data Sheet.
- Microchip believes that its family of products is secure when used in the intended manner, within operating specifications, and under normal conditions.
- Microchip values and aggressively protects its intellectual property rights. Attempts to breach the code protection features of Microchip product is strictly prohibited and may violate the Digital Millennium Copyright Act.
- Neither Microchip nor any other semiconductor manufacturer can guarantee the security of its code. Code protection does not mean that we are guaranteeing the product is "unbreakable". Code protection is constantly evolving. Microchip is committed to continuously improving the code protection features of our products.

Legal Notice

This publication and the information herein may be used only with Microchip products, including to design, test, and integrate Microchip products with your application. Use of this information in any other manner violates these terms. Information regarding device applications is provided only for your convenience and may be superseded by updates. It is your responsibility to ensure that your application meets with your specifications. Contact your local Microchip sales office for additional support or, obtain additional support at www.microchip.com/en-us/support/design-help/client-support-services.

© 2021 Microchip Technology Inc. and its subsidiaries

THIS INFORMATION IS PROVIDED BY MICROCHIP "AS IS". MICROCHIP MAKES NO REPRESENTATIONS OR WARRANTIES OF ANY KIND WHETHER EXPRESS OR IMPLIED, WRITTEN OR ORAL, STATUTORY OR OTHERWISE, RELATED TO THE INFORMATION INCLUDING BUT NOT LIMITED TO ANY IMPLIED WARRANTIES OF NON-INFRINGEMENT, MERCHANTABILITY, AND FITNESS FOR A PARTICULAR PURPOSE, OR WARRANTIES RELATED TO ITS CONDITION, QUALITY, OR PERFORMANCE.

IN NO EVENT WILL MICROCHIP BE LIABLE FOR ANY INDIRECT, SPECIAL, PUNITIVE, INCIDENTAL, OR CONSEQUENTIAL LOSS, DAMAGE, COST, OR EXPENSE OF ANY KIND WHATSOEVER RELATED TO THE INFORMATION OR ITS USE, HOWEVER CAUSED, EVEN IF MICROCHIP HAS BEEN ADVISED OF THE POSSIBILITY OR THE DAMAGES ARE FORESEEABLE. TO THE FULLEST EXTENT ALLOWED BY LAW, MICROCHIP'S TOTAL LIABILITY ON ALL CLAIMS IN ANY WAY RELATED TO THE INFORMATION OR ITS USE WILL NOT EXCEED THE AMOUNT OF FEES, IF ANY, THAT YOU HAVE PAID DIRECTLY TO MICROCHIP FOR THE INFORMATION.

Use of Microchip devices in life support and/or safety applications is entirely at the buyer's risk, and the buyer agrees to defend, indemnify and hold harmless Microchip from any and all damages, claims, suits, or expenses resulting from such use. No licenses are conveyed, implicitly or otherwise, under any Microchip intellectual property rights unless otherwise stated.

Trademarks

The Microchip name and logo, the Microchip logo, Adaptec, AnyRate, AVR, AVR logo, AVR Freaks, BesTime, BitCloud, CryptoMemory, CryptoRF, dsPIC, flexPWR, HELDO, IGLOO, JukeBlox, KeeLoq, Kleer, LANCheck, LinkMD, maXStylus, maXTouch, MediaLB, megaAVR, Microsemi, Microsemi logo, MOST, MOST logo, MPLAB, OptoLyzer, PIC, picoPower, PICSTART, PIC32 logo, PolarFire, Prochip Designer, QTouch, SAM-BA, SenGenuity, SpyNIC, SST, SST Logo, SuperFlash, Symmetricom, SyncServer, Tachyon, TimeSource, tinyAVR, UNI/O, Vectron, and XMEGA are registered trademarks of Microchip Technology Incorporated in the U.S.A. and other countries.

AgileSwitch, APT, ClockWorks, The Embedded Control Solutions Company, EtherSynch, Flashtec, Hyper Speed Control, HyperLight Load, IntelliMOS, Libero, motorBench, mTouch, Powermite 3, Precision Edge, ProASIC, ProASIC Plus, ProASIC Plus logo, Quiet- Wire, SmartFusion, SyncWorld, Temux, TimeCesium, TimeHub, TimePictra, TimeProvider, TrueTime, WinPath, and ZL are registered trademarks of Microchip Technology Incorporated in the U.S.A.

Adjacent Key Suppression, AKS, Analog-for-the-Digital Age, Any Capacitor, AnyIn, AnyOut, Augmented Switching, BlueSky, BodyCom, CodeGuard, CryptoAuthentication, CryptoAutomotive, CryptoCompanion, CryptoController, dsPICDEM, dsPICDEM.net, Dynamic Average Matching, DAM, ECAN, Espresso T1S, EtherGREEN, GridTime, IdealBridge, In-Circuit Serial Programming, ICSP, INICnet, Intelligent Paralleling, Inter-Chip Connectivity, JitterBlocker, Knob-on-Display, maxCrypto, maxView, memBrain, Mindi, MiWi, MPASM, MPF, MPLAB Certified logo, MPLIB, MPLINK, MultiTRAK, NetDetach, NVM Express, NVMe, Omniscient Code Generation, PICDEM, PICDEM.net, PICkit, PICtail, PowerSmart, PureSilicon, QMatrix, REAL ICE, Ripple Blocker, RTAX, RTG4, SAM-ICE, Serial Quad I/O, simpleMAP, SimpliPHY, SmartBuffer, SmartHLS, SMART-I.S., storClad, SQI, SuperSwitcher, SuperSwitcher II, Switchtec, SynchroPHY, Total Endurance, TSHARC, USBCheck, VariSense, VectorBlox, VeriPHY, ViewSpan, WiperLock, XpressConnect, and ZENA are trademarks of Microchip Technology Incorporated in the U.S.A. and other countries.

SQTP is a service mark of Microchip Technology Incorporated in the U.S.A.

The Adaptec logo, Frequency on Demand, Silicon Storage Technology, Symmcom, and Trusted Time are registered trademarks of Microchip Technology Inc. in other countries.

GestIC is a registered trademark of Microchip Technology Germany II GmbH & Co. KG, a subsidiary of Microchip Technology Inc., in other countries.

All other trademarks mentioned herein are property of their respective companies.

© 2021, Microchip Technology Incorporated and its subsidiaries. All Rights Reserved.

ISBN: 978-1-5224-9445-4

Quality Management System

For information regarding Microchip's Quality Management Systems, please visit www.microchip.com/quality.

Worldwide Sales and Service

AMERICAS	ASIA/PACIFIC	ASIA/PACIFIC	EUROPE
Corporate Office 2355 West Chandler Blvd. Chandler, AZ 85224-6199 Tel: 480-792-7200 Fax: 480-792-7277 Technical Support: www.microchip.com/support Web Address: www.microchip.com **Atlanta** Duluth, GA Tel: 678-957-9614 Fax: 678-957-1455 **Austin, TX** Tel: 512-257-3370 **Boston** Westborough, MA Tel: 774-760-0087 Fax: 774-760-0088 **Chicago** Itasca, IL Tel: 630-285-0071 Fax: 630-285-0075 **Dallas** Addison, TX Tel: 972-818-7423 Fax: 972-818-2924 **Detroit** Novi, MI Tel: 248-848-4000 **Houston, TX** Tel: 281-894-5983 **Indianapolis** Noblesville, IN Tel: 317-773-8323 Fax: 317-773-5453 Tel: 317-536-2380 **Los Angeles** Mission Viejo, CA Tel: 949-462-9523 Fax: 949-462-9608 Tel: 951-273-7800 **Raleigh, NC** Tel: 919-844-7510 **New York, NY** Tel: 631-435-6000 **San Jose, CA** Tel: 408-735-9110 Tel: 408-436-4270 **Canada - Toronto** Tel: 905-695-1980 Fax: 905-695-2078	**Australia - Sydney** Tel: 61-2-9868-6733 **China - Beijing** Tel: 86-10-8569-7000 **China - Chengdu** Tel: 86-28-8665-5511 **China - Chongqing** Tel: 86-23-8980-9588 **China - Dongguan** Tel: 86-769-8702-9880 **China - Guangzhou** Tel: 86-20-8755-8029 **China - Hangzhou** Tel: 86-571-8792-8115 **China - Hong Kong SAR** Tel: 852-2943-5100 **China - Nanjing** Tel: 86-25-8473-2460 **China - Qingdao** Tel: 86-532-8502-7355 **China - Shanghai** Tel: 86-21-3326-8000 **China - Shenyang** Tel: 86-24-2334-2829 **China - Shenzhen** Tel: 86-755-8864-2200 **China - Suzhou** Tel: 86-186-6233-1526 **China - Wuhan** Tel: 86-27-5980-5300 **China - Xian** Tel: 86-29-8833-7252 **China - Xiamen** Tel: 86-592-2388138 **China - Zhuhai** Tel: 86-756-3210040	**India - Bangalore** Tel: 91-80-3090-4444 **India - New Delhi** Tel: 91-11-4160-8631 **India - Pune** Tel: 91-20-4121-0141 **Japan - Osaka** Tel: 81-6-6152-7160 **Japan - Tokyo** Tel: 81-3-6880- 3770 **Korea - Daegu** Tel: 82-53-744-4301 **Korea - Seoul** Tel: 82-2-554-7200 **Malaysia - Kuala Lumpur** Tel: 60-3-7651-7906 **Malaysia - Penang** Tel: 60-4-227-8870 **Philippines - Manila** Tel: 63-2-634-9065 **Singapore** Tel: 65-6334-8870 **Taiwan - Hsin Chu** Tel: 886-3-577-8366 **Taiwan - Kaohsiung** Tel: 886-7-213-7830 **Taiwan - Taipei** Tel: 886-2-2508-8600 **Thailand - Bangkok** Tel: 66-2-694-1351 **Vietnam - Ho Chi Minh** Tel: 84-28-5448-2100	**Austria - Wels** Tel: 43-7242-2244-39 Fax: 43-7242-2244-393 **Denmark - Copenhagen** Tel: 45-4485-5910 Fax: 45-4485-2829 **Finland - Espoo** Tel: 358-9-4520-820 **France - Paris** Tel: 33-1-69-53-63-20 Fax: 33-1-69-30-90-79 **Germany - Garching** Tel: 49-8931-9700 **Germany - Haan** Tel: 49-2129-3766400 **Germany - Heilbronn** Tel: 49-7131-72400 **Germany - Karlsruhe** Tel: 49-721-625370 **Germany - Munich** Tel: 49-89-627-144-0 Fax: 49-89-627-144-44 **Germany - Rosenheim** Tel: 49-8031-354-560 **Israel - Ra'anana** Tel: 972-9-744-7705 **Italy - Milan** Tel: 39-0331-742611 Fax: 39-0331-466781 **Italy - Padova** Tel: 39-049-7625286 **Netherlands - Drunen** Tel: 31-416-690399 Fax: 31-416-690340 **Norway - Trondheim** Tel: 47-72884388 **Poland - Warsaw** Tel: 48-22-3325737 **Romania - Bucharest** Tel: 40-21-407-87-50 **Spain - Madrid** Tel: 34-91-708-08-90 Fax: 34-91-708-08-91 **Sweden - Gothenberg** Tel: 46-31-704-60-40 **Sweden - Stockholm** Tel: 46-8-5090-4654 **UK - Wokingham** Tel: 44-118-921-5800 Fax: 44-118-921-5820