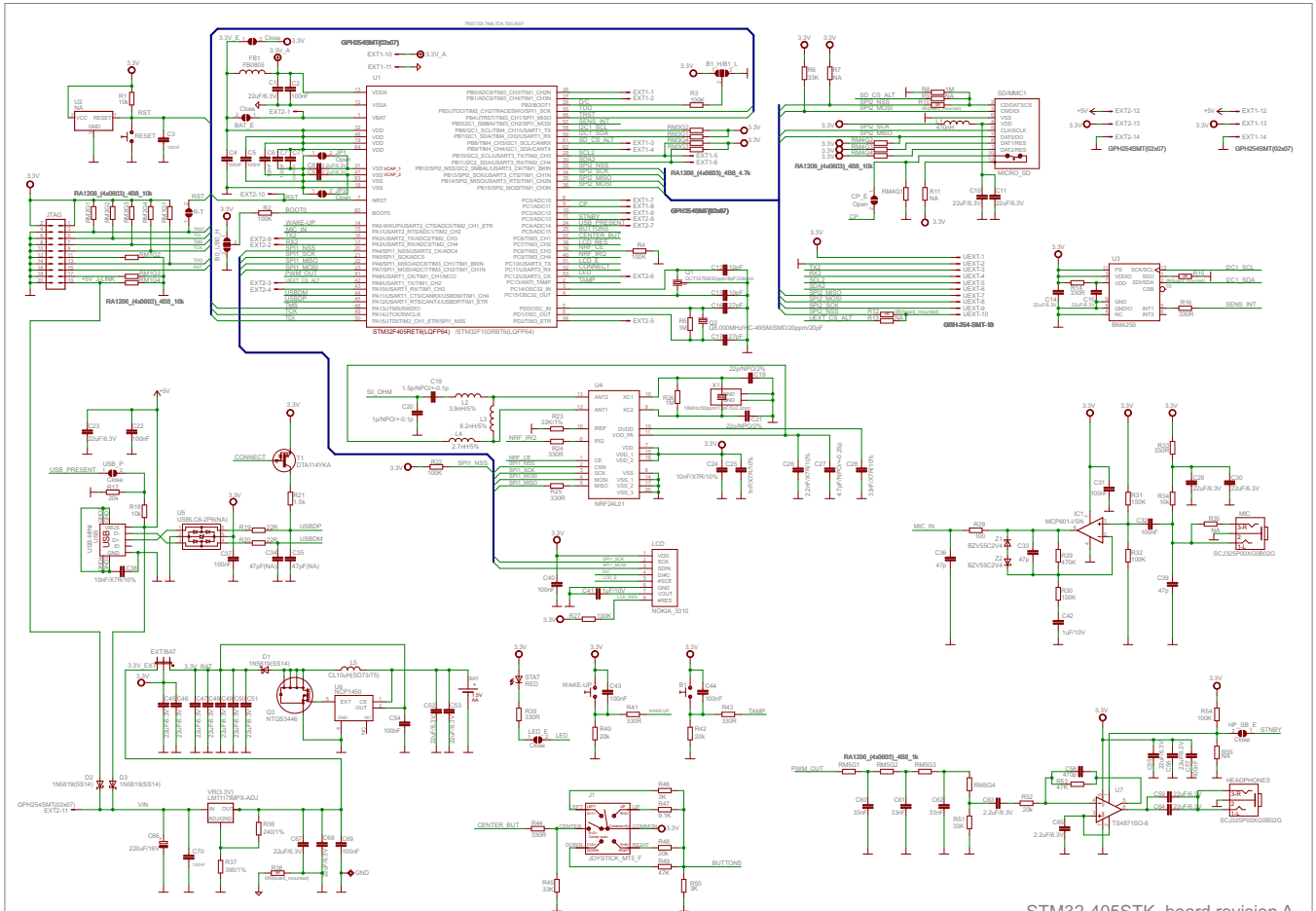

STM32-405STK, board revision A

OLIMEX LTD 2014, PLOVDIV, BULGARIA

https://www.olimex.com