REV.	ECN.NO.	MODIFY.CONTENT	DATE
A	18100002	NEW RELEASE	10/17/2018

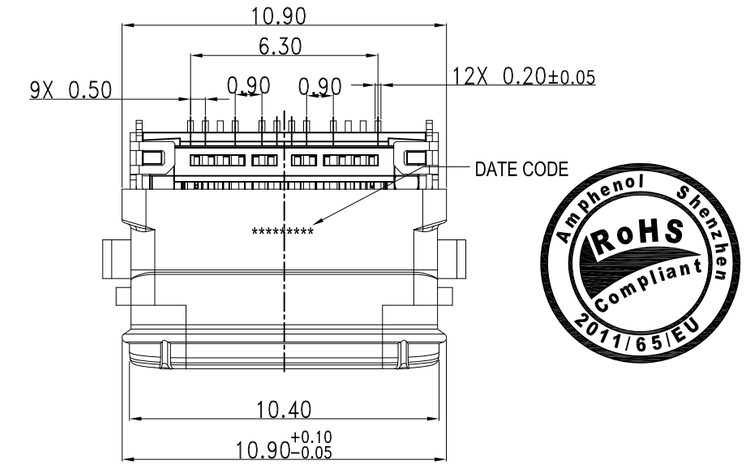

Pin No	Signal Name	Mating Sequence	Pin No	Signal Name	Mating Sequence
A1	GND	First	B12	GND	First
A2	TX1+	Second	B11	RX1+	Second
A3	TX1−	Second	B10	RX1−	Second
A4	VBUS	First	B9	VBUS	First
A5	CC1	Second	B8	SBU2	Second
A6	D+	Second	B7	D−	Second
A7	D−	Second	B6	D+	Second
A8	SBU1	Second	B5	CC2	Second
A9	VBUS	First	B4	VBUS	First
A10	RX2−	Second	B3	TX2−	Second
A11	RX2+	Second	B2	TX2+	Second
A12	GND	First	B1	GND	First
SHELL		GND	SHELL		GND

Notes:
1.Material: SEE BILL OF MATERIAL
2.Tongue position: 0.12mm Max.
3.Waterproof level: IPX8
4.No burrs are allowed on the contact area and solder tail area,the maximum allowed stamping burr is 0.05mm unless otherwise.
5.Specification
Operation Temperature: −40℃to +85℃
Voltage Rating: 30V AC RMS
Insulation Resistance: Initial 1000 MΩ Min.
100 MΩ after environment test
Soldering Heat Resistance: 260℃
Durability: 10,000 Cycles
Mating force : 5N~20N
Un−mating force: 6N~20N
6.Part Number: 124018312112A

Plating Spec.
21:Mating Area: Au30u"
Solder Area: Gold flash

Date Code Description
0:Without D/C
1:With D/C

A:HF
Package Spec.
2:Reel

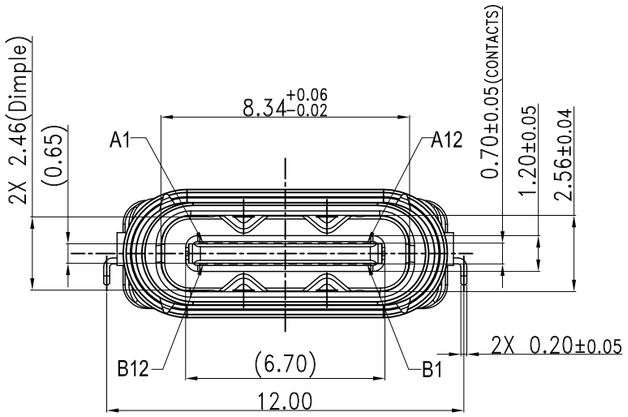

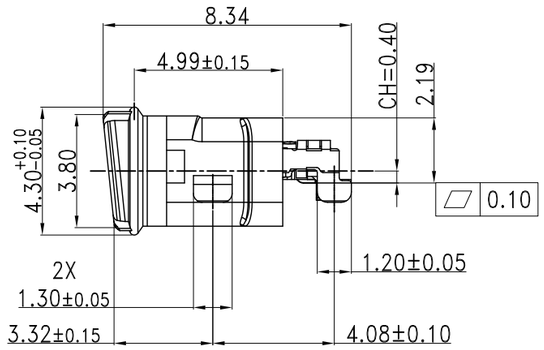

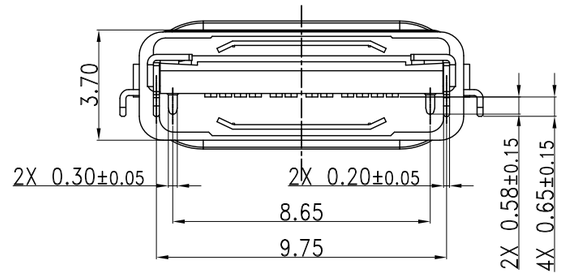

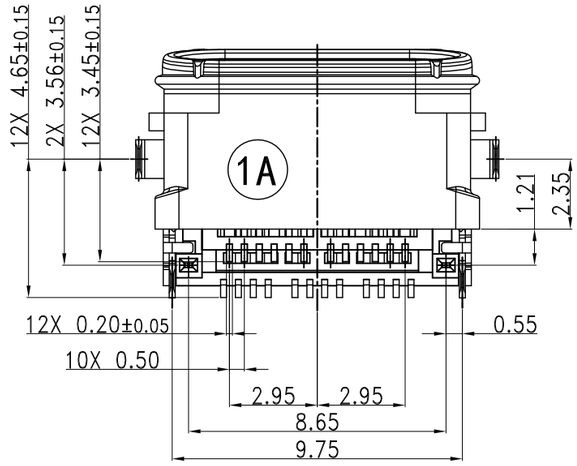

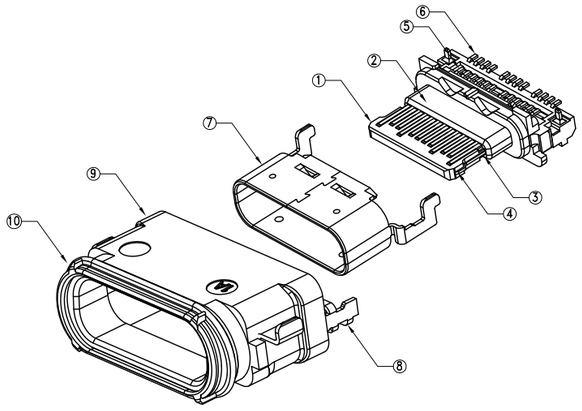

ITEM	DESCRIPTION	Q'TY	MATERIAL	FINISH
10	LIM	1	SILICA GEL	BLACK
9	SOLDER PIN	1	STAINLESS STEEL	SOLDER NICKEL: 50U" MIN
8	SHELL HOUSING	1	High−TEMP. PLASTIC	BLACK
7	SHELL	1	STAINLESS STEEL	SOLDER NICKEL: 50U" MIN
6	TOP TERMINAL	1	COPPER ALLOY	MATING SIDE:30u" AU MIN; SOLDER TAIL:GOLD FLASH, 50u" NICKEL OVERALL.
5	BOTTOM TERMINAL	1	COPPER ALLOY	MATING SIDE:30u" AU MIN; SOLDER TAIL:GOLD FLASH, 50u" NICKEL OVERALL.
4	MID PLATE	1	STAINLESS STEEL	SOLDER NICKEL: 50U" MIN
3	TOP HOUSING	1	High−TEMP. PLASTIC	BLACK
2	BOTTOM HOUSING	1	High−TEMP. PLASTIC	BLACK
1	MAIN HOUSING	1	High−TEMP. PLASTIC	BLACK

BILL OF MATERIAL

GENERAL	TOLERANCE	FILE.NO.	C12401831	PART.NO.	124018312112A	DRAWN	Dave.Ye	MATERIAL		SCALE	1:1
X.±0.50	x.°± 5°	REV.	A	TITLE	USB TYPE C CONNECTOR (WATERPROOF)	CHECKED	Weison.Lu	DATE	2018/10/17	UNIT	MM
.X±0.38	.x°± 2°	SIZE		SHEET	1/2	APPROVED	Tom	Amphenol Shouhmin Industry			
.XX±0.25	.xx± 1°	A4									

REV.	ECN.NO.	MODIFY.CONTENT	DATE

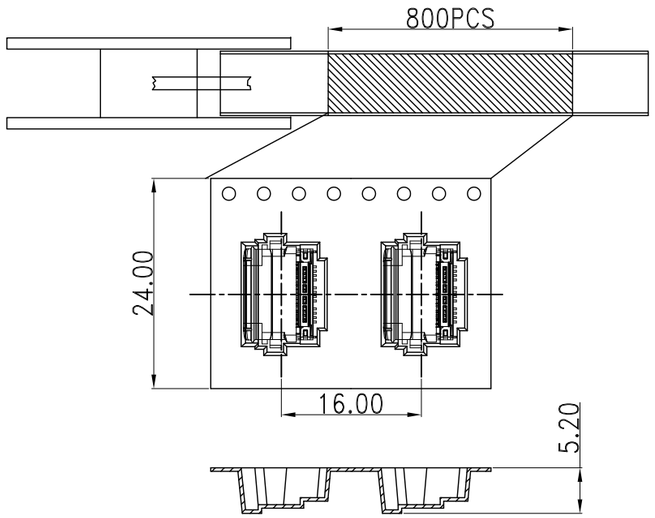

PCS/BOX	PCS/REEL	REEL/BOX
8000	800	10

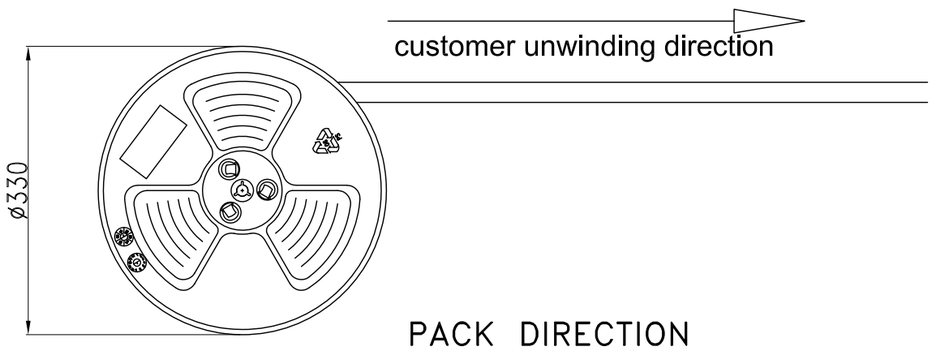

PACK DIRECTION

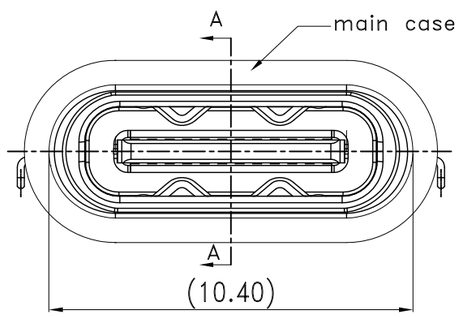

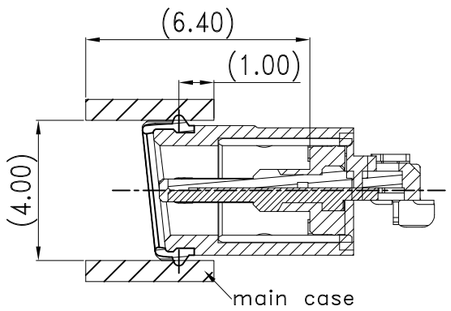

SECTION A–A

PANEL CUT–OUT REFERENCE

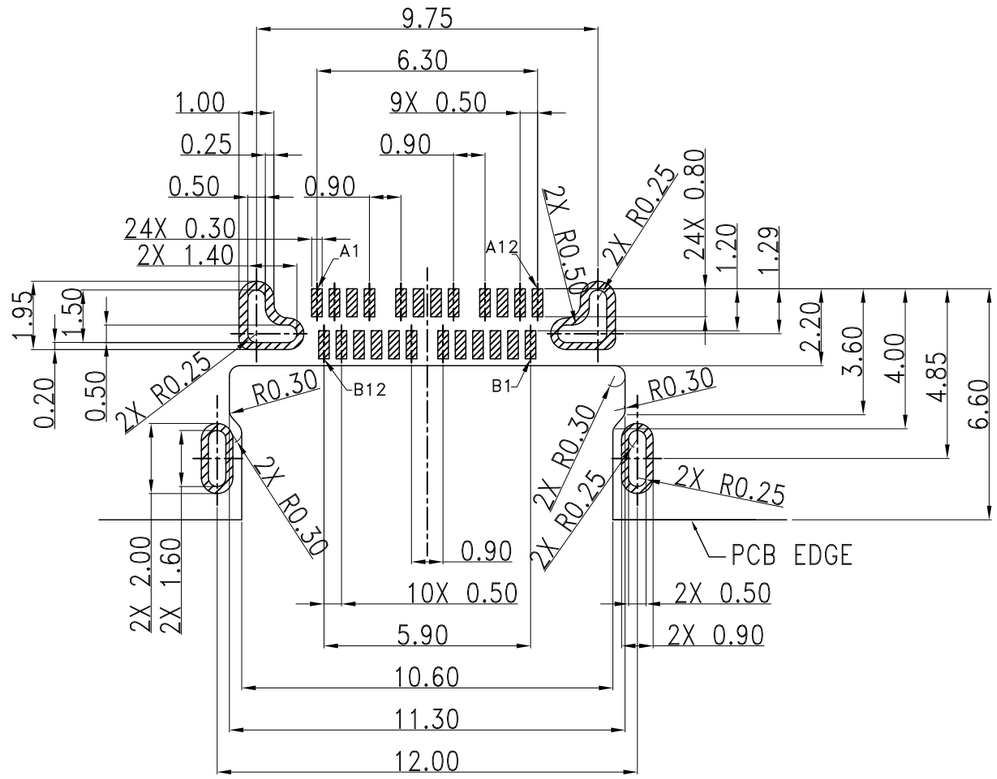

RECOMMENDED PCB LAYOUT
(Tolerance=±0.05)

GENERAL	TOLERANCE	FILE.NO.	C12401831	PART.NO.	124018312112A	DRAWN	Dave.Ye	MATERIAL		SCALE	1:1
X.±0.50	x.°± 5°	REV.	A	TITLE	USB TYPE C CONNECTOR (WATERPROOF)	CHECKED	Weison.Lu	DATE	2018/10/17	UNIT	MM
.X±0.38	.x°± 2°	SIZE						Amphenol Shouhmin Industry			
.XX±0.25	.xx± 1°	A4		SHEET	2/2	APPROVED	Tom				