ENGLISH

Datasheet

Stock No.s: 1747526, 1747527, 1747528, 1747529, 1747530, 1747531, 1747532, 1747533, 1747534, 1747535, 1747537, 1747538, 1747539

ITTU Series Wired Temperature Probes - 1/4"NPT

- ***K or J Type Thermocouples***
- ***PT100 RTD Sensors***
- ***4-20mA linearised output, configurable to application specific temperature range***
- ***6mm stainless steel sheath***

These temperature probe assemblies are all constructed using a stainless steel sheath containing either a J or K type thermocouple or a PT100 RTD sensor element.

The aluminium head contains a programmable 4-20mA transmitter which, although pre-programmed for the standard temperature range of the sensor can be changed by the user* so that the 4-20mA output corresponds to any temperature range within the sensors' capabilities.

A wide range of accessories can be chosen, from plastic and metal cable glands to compression fittings and stainless steel pockets (not supplied). The standard units are supplied complete with a 1/4" NPT metal compression fitting (not shown).

*Requires free software download and 174-7540 cable

Temperature Sensor Style

The standard sensor type is shown in the diagram below.
Standard products are factory configured as below:-

J-Type	0 to 1200°C = 4-20mA
K-Type	0 to 1350°C = 4-20mA
RTD type	-200 to + +850°C = 4-20mA.

A free software download is available which enables the scaling of the 4-20mA output to be customised to suit your specific application*.

The sheath length ranges from 100mm to 400mm for the PT100 sensor version and from 150mm to 400mm for the thermocouple sensor version. This style of thermocouple allows any standard 6mm compression fitting to be used, making it easy to fit the sensors to any process connection.
The head mounting thread is 1/4"NPT.

*Requires 174-7540 USB to serial converter programming cable

Transmitter Technical Specification

Power Supply	12-35 Vdc 2-wire system
Output	4-20mA
Output LoadR_L	500Ω maximum, typically 250Ω
Typical Accuracy	RTD overall 0.1%, thermocouple overall 0.2%
Temperature Drift	≤ 25 ppm/ °C FS
Op. /Ambient Temp	-20 to +50 °C
Storage Temp	-40 to 120 °C

Specifications are subject to change without prior notice.

Dimensions

The dimensions of the standard aluminium connection head are shown below:

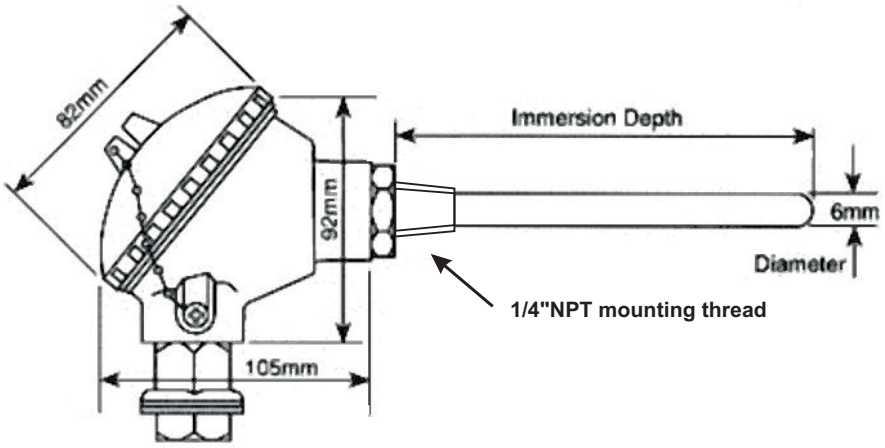

Part Numbers

Part No.	Description	Part No.	Description
1747526	PT100 6x100mm 4-20mA	1747532	J type 6x200mm 4-20mA
1747527	PT100 6x150mm 4-20mA	1747533	J type 6x300mm 4-20mA
1747528	PT100 6x200mm 4-20mA	1747534	J type 6x400mm 4-20mA
1747529	PT100 6x250mm 4-20mA	1747535	K type 6x150mm 4-20mA
1747530	PT100 6x300mm 4-20mA	1747537	K type 6x200mm 4-20mA
1747531	PT100 6x400mm 4-20mA	1747538	K type 6x300mm 4-20mA
		1747539	K type 6x400mm 4-20mA

Wiring Details

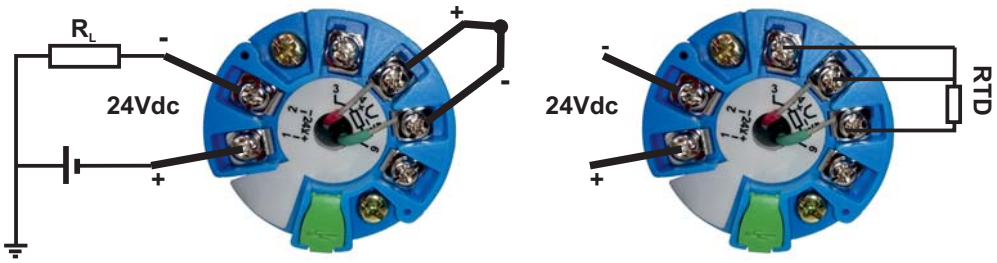

Made in the UK

Specifications are subject to change without prior notice.