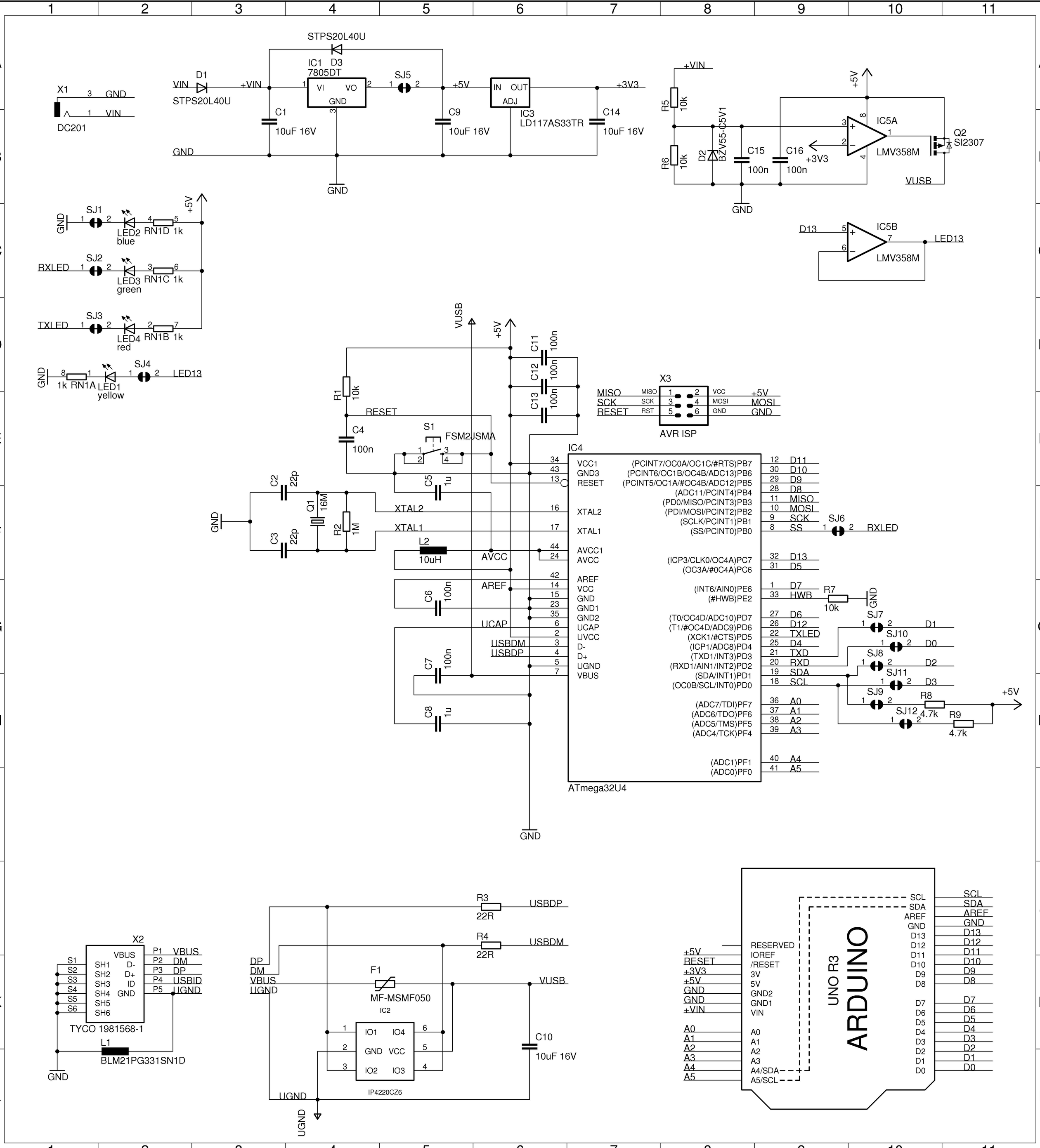
STPS20L40U
IC1 D3
7805DT
D1
VIN
STPS20L40U
+VIN
VI VO
GND
SJ5
+5V
IN OUT
ADJ
+3V3
X1
GND
VIN
DC201
C1
10uF 16V
C9
10uF 16V
IC3
LD117AS33TR
C14
10uF 16V
GND
+VIN
R5 10k
R6 10k
D2 BZV55-C5V1
C15 100n
C16 100n
+3V3
+5V
IC5A
LMV358M
Q2
SI2307
VUSB
D13
IC5B
LMV358M
LED13
SJ1
LED2
blue
RN1D 1k
SJ2
RXLED
LED3
green
RN1C 1k
SJ3
TXLED
LED4
red
RN1B 1k
SJ4
LED13
1k RN1A
LED1
yellow
VUSB
C11 100n
C12 100n
C13 100n
R1 10k
RESET
C4 100n
S1
FSM2JSMA
X3
MISO
SCK
RESET
VCC
MOSI
GND
AVR ISP
IC4
C2 22p
C3 22p
Q1 16M
R2 1M
XTAL2
XTAL1
L2
10uH
AVCC
C5 1u
C6 100n
AREF
UCAP
USBDM
USBDP
C7 100n
C8 1u
VCC1
GND3
RESET
XTAL2
XTAL1
AVCC1
AVCC
AREF
VCC
GND
GND1
GND2
UCAP
UVCC
D-
D+
UGND
VBUS
(PCINT7/OC0A/OC1C/#RTS)PB7
(PCINT6/OC1B/OC4B/ADC13)PB6
(PCINT5/OC1A/#OC4B/ADC12)PB5
(ADC11/PCINT4)PB4
(PD0/MISO/PCINT3)PB3
(PDI/MOSI/PCINT2)PB2
(SCLK/PCINT1)PB1
(SS/PCINT0)PB0
(ICP3/CLK0/OC4A)PC7
(OC3A/#0C4A)PC6
(INT6/AIN0)PE6
(#HWB)PE2
(T0/OC4D/ADC10)PD7
(T1/#OC4D/ADC9)PD6
(XCK1/#CTS)PD5
(ICP1/ADC8)PD4
(TXD1/INT3)PD3
(RXD1/AIN1/INT2)PD2
(SDA/INT1)PD1
(OC0B/SCL/INT0)PD0
(ADC7/TDI)PF7
(ADC6/TDO)PF6
(ADC5/TMS)PF5
(ADC4/TCK)PF4
(ADC1)PF1
(ADC0)PF0
D11
D10
D9
D8
MISO
MOSI
SCK
SS
SJ6
RXLED
D13
D5
D7
HWB
R7 10k
D6
D12
TXLED
D4
TXD
RXD
SDA
SCL
SJ7
D1
SJ10
D0
SJ8
D2
SJ11
D3
SJ9
SJ12
R8 4.7k
R9 4.7k
+5V
ATmega32U4
X2
VBUS
SH1 D-
SH2 D+
SH3 ID
SH4 GND
SH5
SH6
S1
S2
S3
S4
S5
S6
P1 VBUS
P2 DM
P3 DP
P4 USBID
P5 UGND
TYCO 1981568-1
L1
BLM21PG331SN1D
DP
DM
VBUS
UGND
R3 22R
R4 22R
USBDP
USBDM
F1
MF-MSMF050
IC2
IO1 IO4
GND VCC
IO2 IO3
IP4220CZ6
VUSB
C10
10uF 16V
UGND
RESERVED
IOREF
/RESET
3V
5V
GND2
GND1
VIN
A0
A1
A2
A3
A4/SDA
A5/SCL
±5V
RESET
±3V3
±5V
GND
GND
±VIN
A0
A1
A2
A3
A4
A5
UNO R3
ARDUINO
SCL
SDA
AREF
GND
D13
D12
D11
D10
D9
D8
D7
D6
D5
D4
D3
D2
D1
D0