SPECIFICATION

受　控

Customer　　:

Applied To　　:

Product Name :　SPEAKER

Model Name　:　KPB28x21-2-6781

Drawing No.　:　KFC6781

Signature of Appronal

Signature of KEPO

Approved by	Checkde by	Issued by	Date

宁波凯普电子有限公司

Ningbo Kepo Electronics Co.,Ltd.

ISO9001 Certificate

宁波东钱湖镇东钱湖工业区宝源路 25 号

TEL:+86-574-88370330 FAX:+86-574-88370329

No.25 Baoyuan road Dongqian Lake, Industry Area, Dongqian town,Ningbo City, China(Post Code:315121)

Sales@chinaacoustic.com　*www.chinaacoustic com*

CONTENTS

1. Scope

This specification is applied to the dynamic speaker which is used all of the electrical acoustic product.
-- compact, rich sound
-- applications: mobile phone, PDA, notebook computer, etc. ..

2. General

2.1 Out-Diameter : 28X21 mm

2.2 Height : 23.4 mm

2.3 Weight : 8.1 g

2.4 Operating Temperature range:

-20~+60℃ without loss of function

2.5 Store Temperature range:

-30~+65℃ without loss of function

3. Electrical and Acoustic Characteristics.

Test condition : 15 ~ 35 ℃, 25% ~ 85% RH, 860~1060 mbar

No	Items	Specification
1	Impedance	8 Ω ± 15% (1Vrms at 2.5KHz)
2	Sound Pressure Level	93 dB ± 3dB (0.1w/0.1m at 1.0;1.2;1.5;2.0kHz average)
3	Resonance Frequency	1000 Hz ± 20%
4	Frequency Range	Fo ~20KHz
5	Input Power	Rated 0.8 W / Max. 1 W
6	Distortion	10% Max. at 1kHz/1Vrms
7	Buzz and Rattle	Should not be audible buzzers,rattles when the 2.53V sine wave signal swept at frequency range.
8	Polarity	When supplied plus D.C. voltage to (+) terminal, the cone diaphragm must move to forward.

4. Reliability Test

After test(1~7item), the speaker S.P.L . difference shall be within ±3dB, and the appearance not exist any change to be harmful to normal operation (e.g. cracks,rusts,damages and especially distortion).

No	Items	Specification
1	High Temperature Test	After being placed in a chamber with +65±3 ℃ for 96 hours and then being placed in natural condition for 1 hour, speaker shall be measured.
2	Low Temperature Test	After being placed in a chamber with −30±3 ℃ for 96 hours and then being placed in natural condition for 1 hour, speaker shall be measured.
3	Humidity Test	After being placed in a chamber with 85 to 90%R.H. at +40±2 ℃ for 96 hours and then being placed in natural condition for 1 hour, speaker shall be measured.
4	Thermal Shock Test	After being placed in a chamber at +60℃ for 1 hour, then speaker shall be placed in a chamber at −20℃ for 1 hour(1 cycle is the below diagram). After 4 above cycles, speaker shall be measured after being placed in natural condition for 10 Sec.. 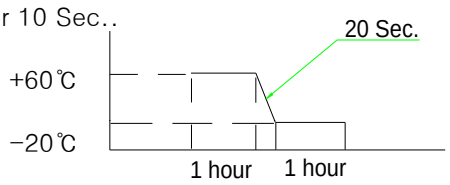
5	Vibration Test	After being applied vibration of amplitude of 1.5mm with 10 to55Hz band of vibration frequency to each of 3 perpendicular directions for 1 hour, then placed in natural condition for 1 hour, speaker shall be measured.
6	Drop Test	The speaker when mounted in the jig which weight 85g~100g, shall with stand 15 times random drops from a height of 1.5 meter to a concrete floor faced with 5mm thick hard wood board.and be nothing mechanical damage.
7	Load test	After being applied loading white noise with input power 0.8W(2.53Vrms.) for 96 hours, then placed in natural condition for 1 hour, speaker shall be measured.
8	Insulation test	When they are measured with DC 100V the insulation resistance between v.c. terminal and frame must be more than 1 MΩ

5. Measurement Block Diagram & Response curve

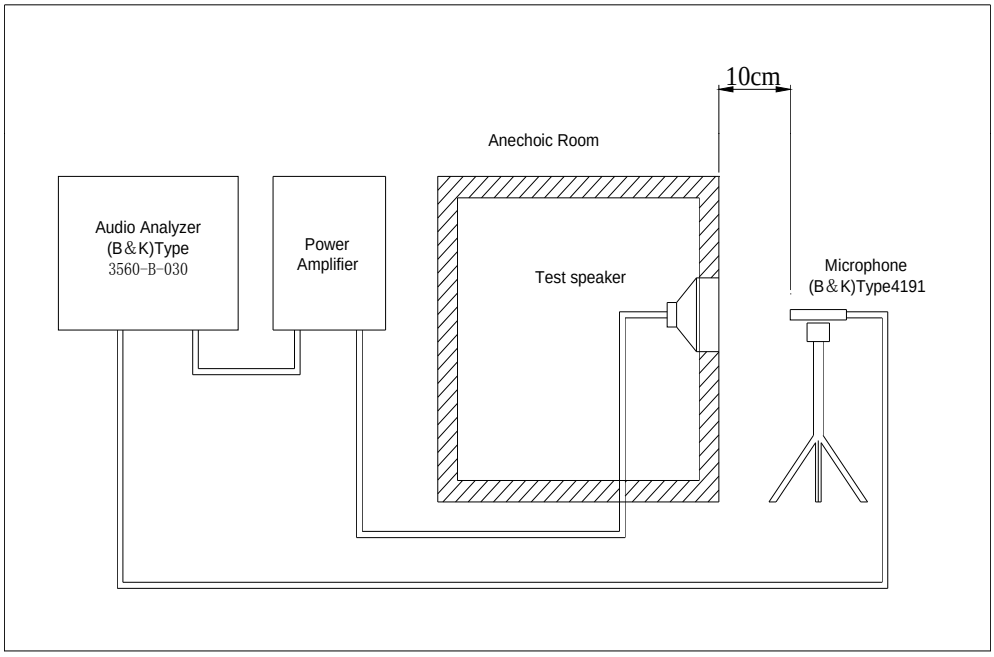

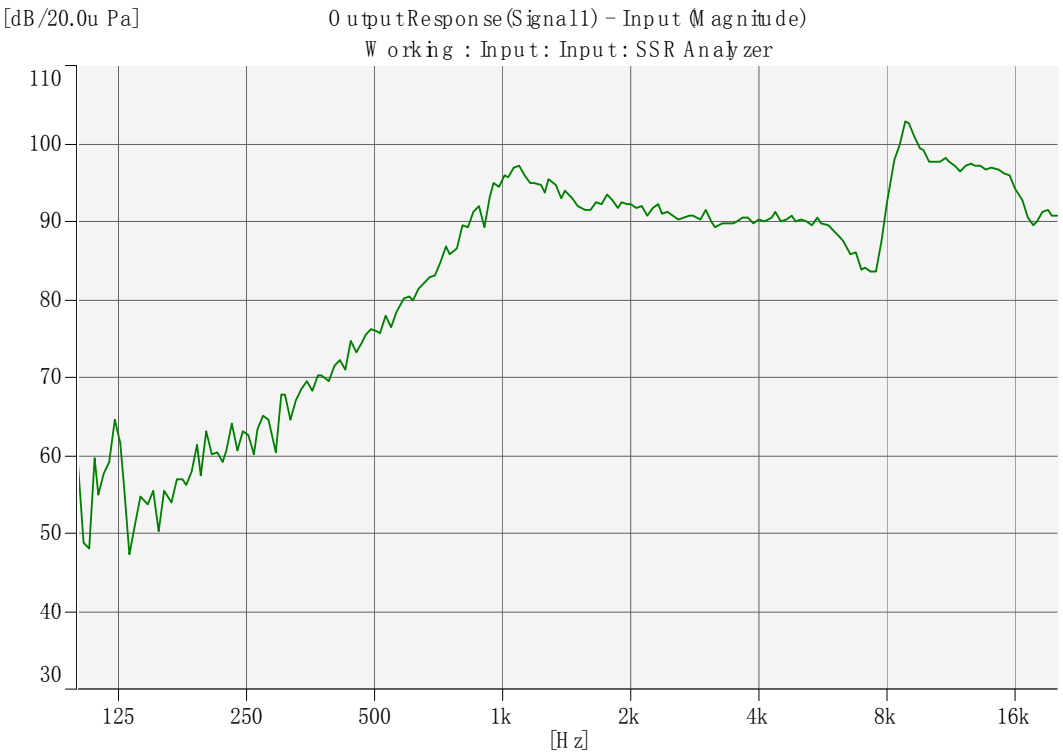

6. Structure

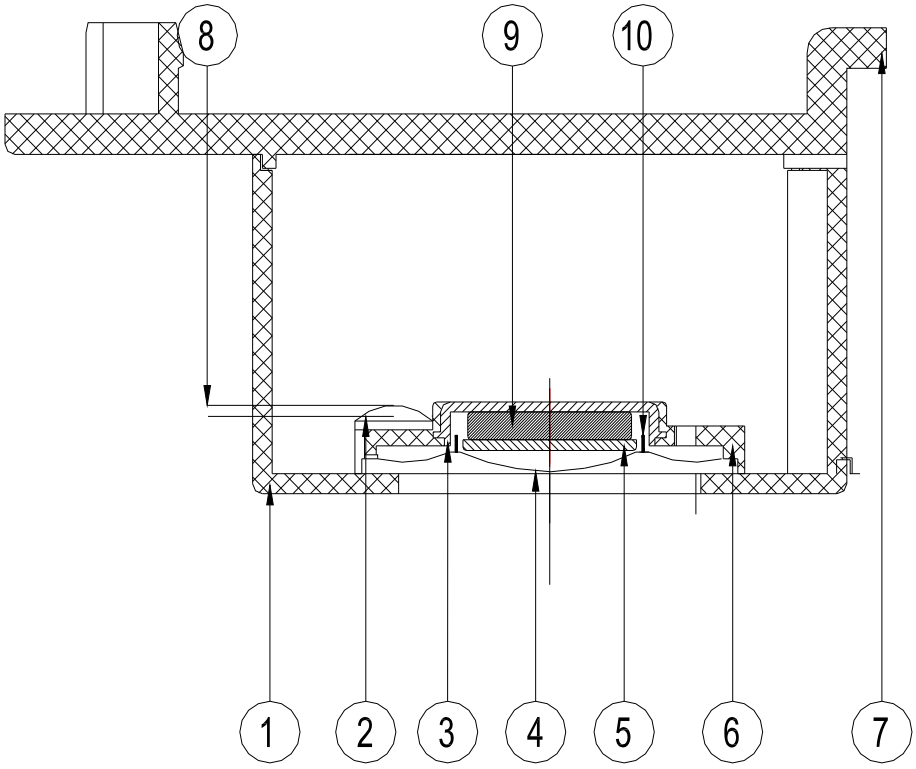

No.	Part Name	Q'ty	Material	Remarks
10	Voice Coil	1	Copper	
9	Magnet	1	Nd-Fe-B	
8	Line	1	Copper	
7	Shell	1	ABS	
6	Frame	1	PBT	
5	Plate	1	SPCC	
4	Diaphragm	1	Mylar	
3	Yoke	1	SPCC	
2	PCB	1	FR-4	
1	Shell	1	ABS	

7. Dimensions

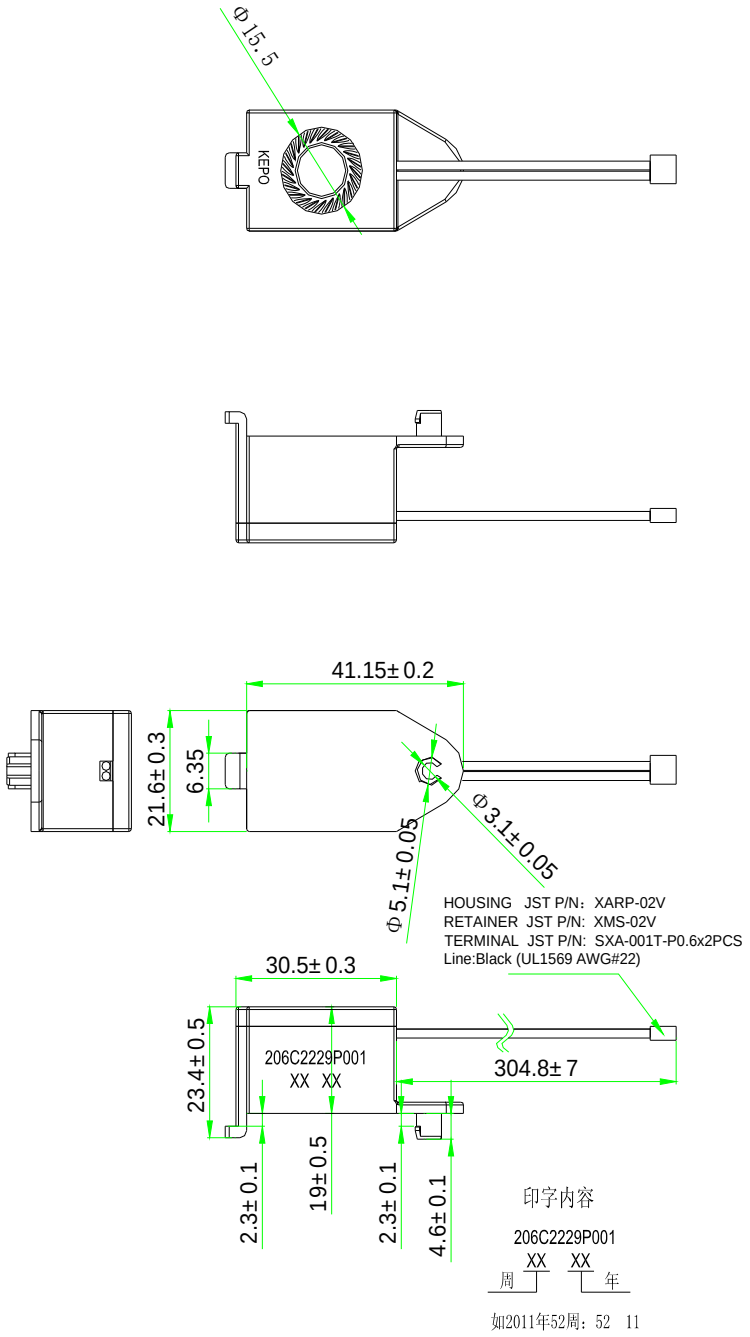

FIRST ANGLE PROJECTION

UNIT : mm

Tolerance : ±0.2

8. Packing

Each minimum package unit of products shall be in a carton box and it shall be
clearly marked with Part Number ,quantity and outgoing inspection number.

There shall be no mechanical damage on products during tsansportation and/or
in storage.

9. Revision

Rev. No.	DATE	PAGE	DESCRIPTION	BOM
1.0	2012-6-2		Primary	
1.1	2012-10-6		change connector 3p->2p	
1.2	2012-11-12		Add lettering	
1.3	2014-3-31		Printing method change ：Spray code to Laster	