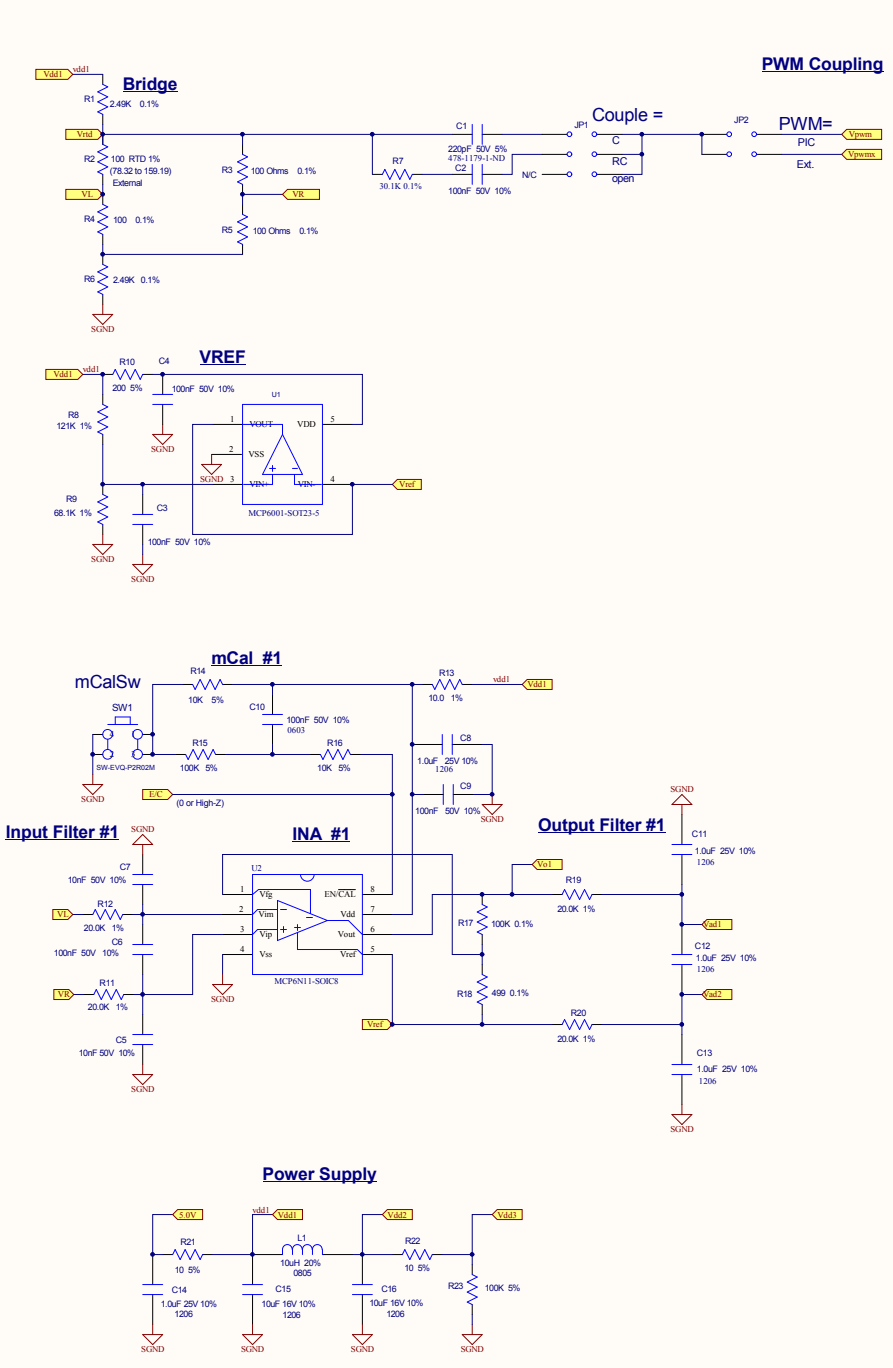
Bridge
PWM Coupling
Couple =
C
RC
open
PWM=
PIC
Ext.
VREF
mCal #1
mCalSw
SW1
SW-EVQ-P2R02M
(0 or High-Z)
Input Filter #1
INA #1
Output Filter #1
Power Supply
Input Filter 2
INA #2
Output Filter #2
Test Points
ICSP
USB PIC
USB
RESONATOR-CSTCE
CONN_USB_MINI_B
MCP6N11 and MCP6V2x Wheatstone Bridge Reference Design
Microchip Technology Inc.
2355 W. Chandler Blvd.
Chandler, AZ 85224
United States
Size: C
Number: 103-00354
Revision: 3
Date: 10/20/2011
Time: 3:40PM
Sheet 1 of 1