Technical Library

16A Circular Switches Dimensions

Switch Dimensions

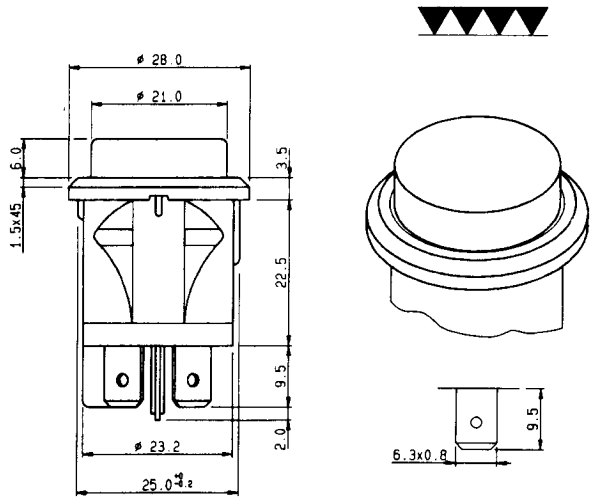

Panel Cutout Dimensions

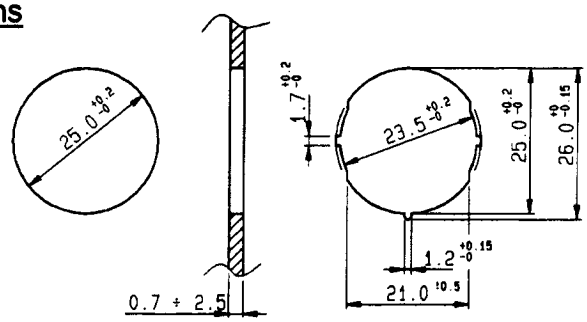

Switch Contact Layout

1. SPST Latching
2. DPST Latching
4. SPST Momentary
7. DPST Momentary
8. DPST Illuminated Latching

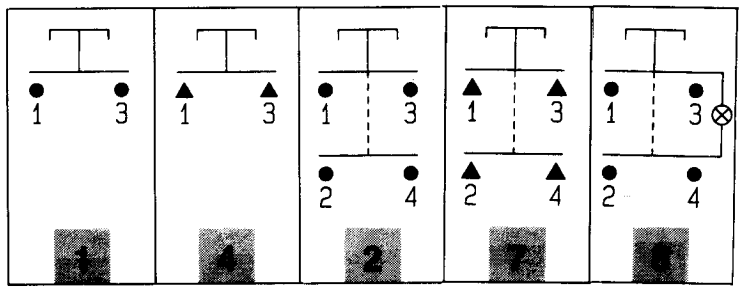

The information provided from the RS technical library is believed to be accurate and reliable; however, RS Components Ltd. assumes no responsibility for inaccuracies or omissions, or for the use of this information, and all use of such information shall be entirely at the user's own risk.
No responsibility is assumed by RS Components Ltd. for any infringements of patents or other rights of third parties which may result from its use.
Specifications shown in RS Components Ltd. technical library is subject to change without notice.

RS Components Ltd. PO Box 99, Corby, Northants, NN17 9RS
An Electrocomponents Company
Telephone: 01536 201234
© RS Components Ltd. 1997