100	LOOSE PC, BOX	8-321045-1
50	~~LOOSE PC, BLS~~	~~8-321045-2~~
25	~~LOOSE PC, BLS~~	~~8-321045-5~~
5	~~LOOSE PC, BLS~~	~~8-321045-4~~

CATALOG NUMBER 321045

USED ON

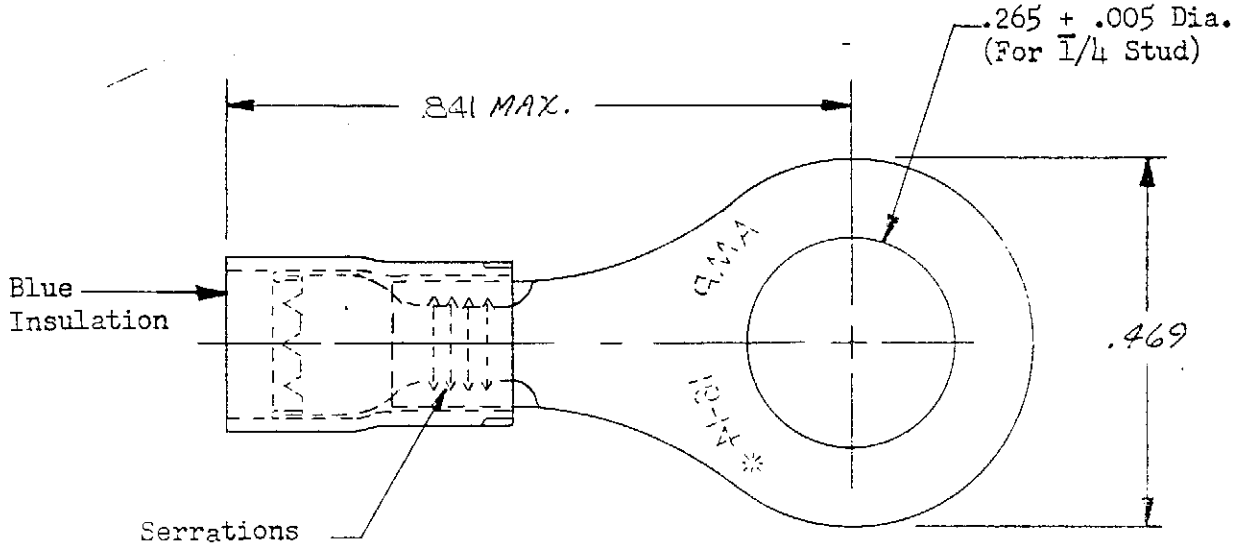

SUPERSEEDED BY 8-321045-1

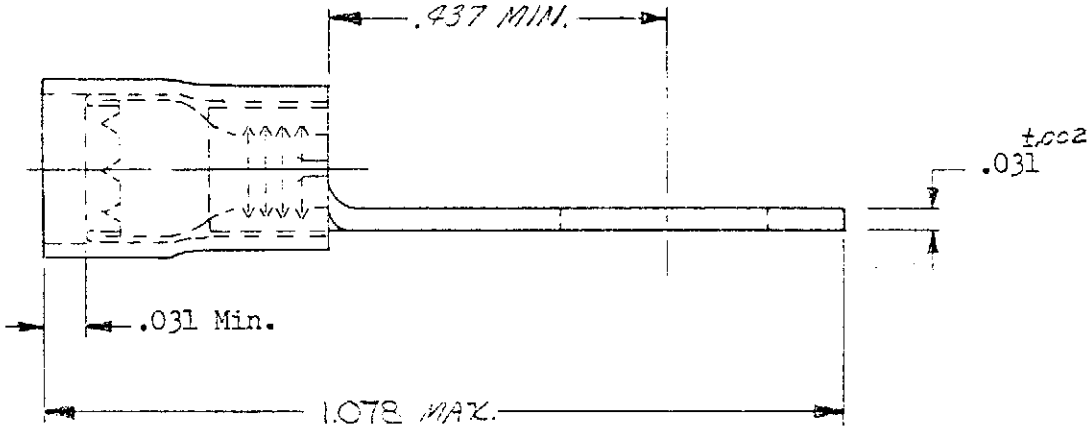

FOR .115 TO .170 INSULATION DIA. (WIRE)

COPYRIGHT IN U.S.A. 195_Z BY AMP INCORPORATED.
COPYRIGHT UNDER INTERNATIONAL COPYRIGHT UNION. ALL RIGHTS RESERVED UNDER PAN-AMERICAN COPYRIGHT UNION (1910)

MATERIAL: Copper (ASTM B152)
HEAT TREAT: Annealed

NOTE:
PT. No. ON TAPE Z-321045-1

FINISH: EXCEPT AS NOTED: TIN PL (MIL-T-10727) ~~Hot Electro-Tinned~~

TA.	NO.	ALT.
1		
2		
3		
4		
5		
6		
7		
8		
9		
10		
11		
12		
13		
14	X	D
15		
16		
17		
18		
19		
20		
21		
22		
23		
24		
25		

REV.	REVISIONS	DATE	BY	N.D.C.
H1	REV PER 06-007869	5/06		
H	REV PER 063A-0770-00	12/00		
G	REV/0720-0605-95	5-2-95		
F	REV/0720-0546-95	3-22-95		
E	REV/0720-0060-93	4-5-93		
D	REV. PER ECN P-7000	7-25-71		P-7000
C	REVISED	4-9-70		B-630
B	REV PER ECN P-5876 & G-1062	11/30/69		
A	REV PER ECN P-5857	11/13/68		
1	Revised	7-6-61		

DR. E. L. WEIST	9-16-57	D. E.	
CK. T. Eilenberg	9-19-57	P. T. E.	
REL. E. [illegible]	9-19-57		

AMP 250

CUSTOMER DRAWING

WIRE TERMINAL

CLASS	RING TONGUE
TYPE	PRE-INSULATED DIAMOND GRIP (NYLON)
WIRE SIZE	16-14 (SHIP 2÷-4)

EXCEPT AS NOTED:
TOLERANCES
DECIMALS [redacted]
ANGLES [redacted]
FRACTIONS [redacted]

SHOW PT. NO. IN AREA MARKED "X"
BREAK ALL SHARP EDGES

AMP INCORPORATED
HARRISBURG, PENNA.

SCALE 4-1 | CATALOG NUMBER | NUMBER 321045 | REV. H1