THIS DRAWING IS UNPUBLISHED. RELEASED FOR PUBLICATION SEPT ,2005.
© COPYRIGHT 2005 By – ALL RIGHTS RESERVED.

NOT RELEASED

REVISIONS					
P	LTR	DESCRIPTION	DATE	DWN	APVD
	E	REVISE PER ECR-16-013316	10OCT2016	LN	RS

1-1337431-0/6-1337431-0

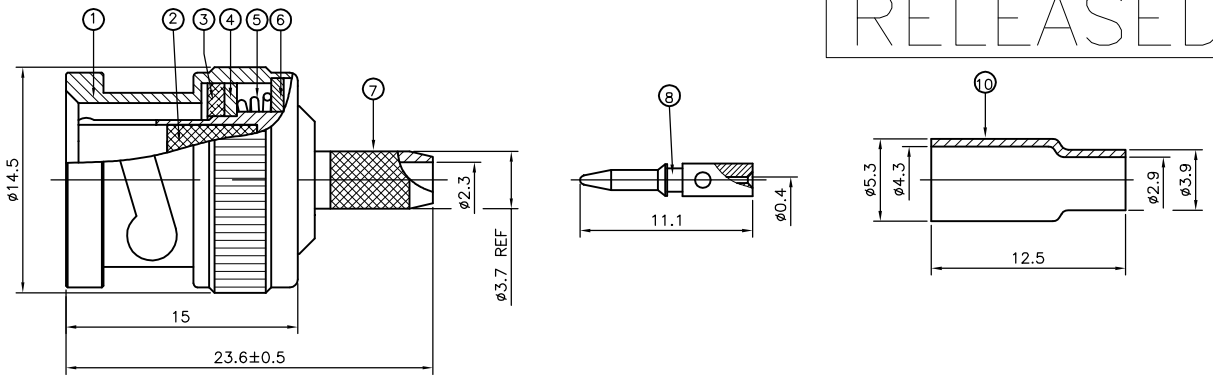

1-1337431-1/6-1337431-1

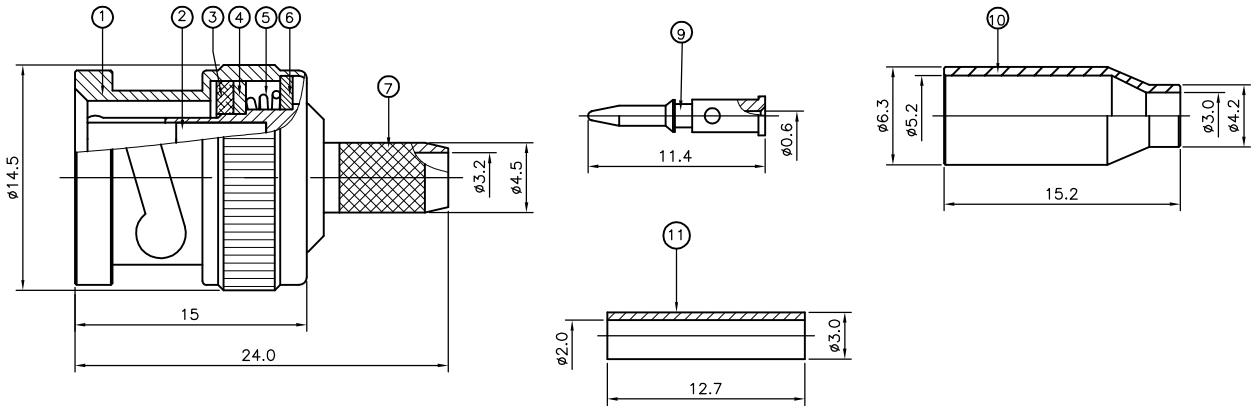

NOTES:

1. SINGLE PACKING: ONE CONNECTOR PER LABELED BAG PACKAGED. LABELED PER TEC-107-115
2. TRAY PACK
3. FLASH Au PLATING
4. 0.76µm Au PLATING
5. Ni PLATING
6. THIS ITEM MUST BE WHITE
7. HAND TOOL : 9-1478240-0
8. DIE SET : 9-1478242-0
9. ELECTRICAL CHARACTERISTICS

FREQUENCY RANGE:	DC – 2 GHz
NOMINAL IMPEDANCE:	75 Ohm
INSULATION RESISTANCE:	5000 MOhm
WORKING VOLTAGE:	500 Volts RMS at Sea Level
DIELECTRIC WITHSTAND VOLTAGE:	1500 Volts RMS Max
CONTACT RESISTANCE:	
CENTRE CONTACT:	1.50 mOhm Max
OUTER CONTACT:	0.20 mOhm Max
VSWR @ 2GHz:	1.50:1 Max
INSERTION LOSS dB @ x 3 GHz:	0.20 Max

10. MECHANICAL CHARACTERISTICS

COUPLING NUT RETENTION FORCE:	445N Min
CABLE RETENTION FORCE:	85N Min
DURABILITY:	500 Cycles Min

11. ENVIRONMENTAL CHARACTERISTICS

OPERATING TEMPERATURE:	-65 to +165 DegC

6--1	1--1	6--0	1--0	MATERIAL	DESCRIPTION	ITEM
1	1	–	–	PTFE	PUSHER SLEEVE	11
1	1	1	1	BRASS (5)	FERRULE	10
1	1	–	–	BRASS (4)	CONTACT	9
–	–	1	1	BRASS (3)	CONTACT	8
1	1	1	1	BRASS (5)	BODY	7
1	1	1	1	BRASS (5)	WASHER	6
1	1	1	1	SPRING STEEL	SPRING	5
1	1	1	1	BRASS (5)	WASHER	4
1	1	1	1	SILICON RUBBER (6)	GASKET	3
1	1	1	1	PTFE	INSULATION	2
1	1	1	1	BRASS (5)	SHELL	1
(2)	(1)	(2)	(1)			
QUANTITY PER ASSY				PARTS LIST		

RECOMMENDED CENTRE CONTACT A/F HEX

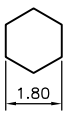

RECOMMENDED CRIMP SLEEVE A/F HEX

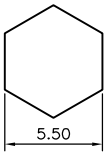

RECOMMENDED CABLE STRIPPING DIM'S

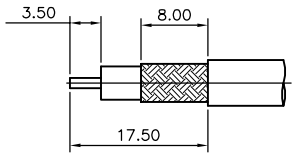

THIS DRAWING IS A CONTROLLED DOCUMENT.

DIMENSIONS: mm

TOLERANCES UNLESS OTHERWISE SPECIFIED:
0 PLC ± –
1 PLC ± –
2 PLC ± –
3 PLC ± –
4 PLC ± –
ANGLES ± 5°

MATERIAL: SEE TABLE
FINISH: SEE TABLE

DWN	J.SANDWELL	12SEPT05
CHK	S.PARLOW	12SEPT05
APVD	F.WHEELER-KING	12SEPT05
PRODUCT SPEC	—	
APPLICATION SPEC	411-3247	
WEIGHT	0.000000	

TE Connectivity

NAME: BNC STRAIGHT PLUG CRIMP 75 OHM RG179B/U, 187A/U, TM3289 & URM 111 –

SIZE	CAGE CODE	DRAWING NO	RESTRICTED TO
A3	00779	C-1337431	—

CUSTOMER DRAWING | SCALE NTS | SHEET 1 OF 1 | REV E

1470-19 (1/15)