H3LIS331DL

MEMS motion sensor: low-power high-g 3-axis digital accelerometer

Datasheet - production data

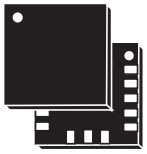

TFLGA 3x3x1.0 mm^3 16L

Features

- Wide supply voltage, 2.16 V to 3.6 V
- Low-voltage compatible IOs, 1.8 V
- Ultra-low power consumption down to 10 µA in low-power mode
- ±100*g*/±200*g*/±400*g* dynamically selectable full scales
- I^{2}C/SPI digital output interface
- 16-bit data output
- Sleep-to-wakeup function
- 10000 *g* high-shock survivability
- ECOPACK®, RoHS and “Green” compliant

Applications

- Shock detection
- Impact recognition and logging
- Concussion detection

Description

The H3LIS331DL is a low-power high-performance 3-axis linear accelerometer belonging to the “nano” family, with digital I^{2}C/SPI serial interface standard output.

The device features ultra-low power operational modes that allow advanced power saving and smart sleep-to-wakeup functions.

The H3LIS331DL has dynamically user-selectable full scales of ±100*g*/±200*g*/±400*g* and it is capable of measuring accelerations with output data rates from 0.5 Hz to 1 kHz.

The H3LIS331DL is available in a small thin plastic land grid array package (LGA) and it is guaranteed to operate over an extended temperature range from -40 °C to +85 °C.

Table 1. Device summary

Order codes	Temperature range [°C]	Package	Packaging
H3LIS331DL	-40 to +85	TFLGA 3x3x1.0 mm^3 16L	Tray
H3LIS331DLTR	-40 to +85	TFLGA 3x3x1.0 mm^3 16L	Tape and reel

This is information on a product in full production. www.st.com

Downloaded from Arrow.com.

Contents

1 Block diagram and pin description 7

1.1 Block diagram 7

1.2 Pin description 7

2 Mechanical and electrical specifications 9

2.1 Mechanical characteristics 9

2.2 Electrical characteristics 10

2.3 Communication interface characteristics 11

2.3.1 SPI - serial peripheral interface 11

2.3.2 I^2C - inter-IC control interface 12

2.4 Absolute maximum ratings 13

2.5 Terminology 14

2.5.1 Sensitivity 14

2.5.2 Zero-g level 14

2.5.3 Sleep-to-wakeup 14

3 Functionality 15

3.1 Sensing element 15

3.2 IC interface 15

3.3 Factory calibration 15

4 Application hints 16

4.1 Soldering information 16

5 Digital interfaces 17

5.1 I^2C serial interface 17

5.1.1 I^2C operation 18

5.2 SPI bus interface 19

5.2.1 SPI read 20

5.2.2 SPI write 21

5.2.3 SPI read in 3-wire mode 22

6 Register mapping 23

Downloaded from Arrow.com.

7 Register description 24

7.1 WHO_AM_I (0Fh) 24
7.2 CTRL_REG1 (20h) 24
7.3 CTRL_REG2 (21h) 25
7.4 CTRL_REG3 [interrupt CTRL register] (22h) 27
7.5 CTRL_REG4 (23h) 27
7.6 CTRL_REG5 (24h) 28
7.7 HP_FILTER_RESET (25h) 29
7.8 REFERENCE (26h) 29
7.9 STATUS_REG (27h) 29
7.10 OUT_X_L (28h), OUT_X_H (29h) 30
7.11 OUT_Y_L (2Ah), OUT_Y_H (2Bh) 30
7.12 OUT_Z_L (2Ch), OUT_Z_H (2Dh) 30
7.13 INT1_CFG (30h) 30
7.14 INT1_SRC (31h) 31
7.15 INT1_THS (32h) 32
7.16 INT1_DURATION (33h) 32
7.17 INT2_CFG (34h) 32
7.18 INT2_SRC (35h) 33
7.19 INT2_THS (36h) 34
7.20 INT2_DURATION (37h) 34

8 Package information 35

9 Revision history 37

Downloaded from Arrow.com.

List of tables

Table 1. Device summary . . . 1
Table 2. Pin description . . . 8
Table 3. Mechanical characteristics . . . 9
Table 4. Electrical characteristics . . . 10
Table 5. SPI slave timing values . . . 11
Table 6. I^2C slave timing values . . . 12
Table 7. Absolute maximum ratings . . . 13
Table 8. Serial interface pin description . . . 17
Table 9. Serial interface pin description . . . 17
Table 10. SAD+Read/Write patterns . . . 18
Table 11. Transfer when master is writing one byte to slave . . . 18
Table 12. Transfer when master is writing multiple bytes to slave . . . 19
Table 13. Transfer when master is receiving (reading) one byte of data from slave . . . 19
Table 14. Transfer when master is receiving (reading) multiple bytes of data from slave . . . 19
Table 15. Register address map . . . 23
Table 16. WHO_AM_I register . . . 24
Table 17. CTRL_REG1 register . . . 24
Table 18. CTRL_REG1 description . . . 24
Table 19. Power mode and low-power output data rate configurations . . . 25
Table 20. Normal mode output data rate configurations and low-pass cutoff frequencies . . . 25
Table 21. CTRL_REG2 register . . . 25
Table 22. CTRL_REG2 description . . . 25
Table 23. High-pass filter mode configuration . . . 26
Table 24. High-pass filter cutoff frequency configuration . . . 26
Table 25. CTRL_REG3 register . . . 27
Table 26. CTRL_REG3 description . . . 27
Table 27. Data signal on INT 1 and INT 2 pad . . . 27
Table 28. CTRL_REG4 register . . . 27
Table 29. CTRL_REG4 description . . . 28
Table 30. CTRL_REG5 register . . . 28
Table 31. CTRL_REG5 description . . . 28
Table 32. Sleep-to-wake configuration . . . 28
Table 33. REFERENCE register . . . 29
Table 34. REFERENCE description . . . 29
Table 35. STATUS_REG register . . . 29
Table 36. STATUS_REG description . . . 29
Table 37. INT1_CFG register . . . 30
Table 38. INT1_CFG description . . . 30
Table 39. Interrupt 1 source configurations . . . 31
Table 40. INT1_SRC register . . . 31
Table 41. INT1_SRC description . . . 31
Table 42. INT1_THS register . . . 32
Table 43. INT1_THS description . . . 32
Table 44. INT1_DURATION register . . . 32
Table 45. INT2_DURATION description . . . 32
Table 46. INT2_CFG register . . . 32
Table 47. INT2_CFG description . . . 32
Table 48. Interrupt mode configuration . . . 33

Downloaded from Arrow.com.

Table 49. INT2_SRC register 33
Table 50. INT2_SRC description 33
Table 51. INT2_THS register 34
Table 52. INT2_THS description. 34
Table 53. INT2_DURATION register 34
Table 54. INT2_DURATION description. 34
Table 55. TFLGA 3x3x1.0 mm^3 16L mechanical data 36
Table 56. Document revision history. 37

Downloaded from Arrow.com.

List of figures

Figure 1. Block diagram . . . 7
Figure 2. Pin connections . . . 7
Figure 3. SPI slave timing diagram (2) . . . 11
Figure 4. I^2C slave timing diagram . . . 12
Figure 5. H3LIS331DL electrical connections . . . 16
Figure 6. Read and write protocol . . . 20
Figure 7. SPI read protocol . . . 20
Figure 8. Multiple byte SPI read protocol (2-byte example) . . . 21
Figure 9. SPI write protocol . . . 21
Figure 10. Multiple byte SPI write protocol (2-byte example) . . . 22
Figure 11. SPI read protocol in 3-wire mode . . . 22
Figure 12. TFLGA 3x3x1.0 mm^3 16L mechanical drawing . . . 36

Downloaded from Arrow.com.

1 Block diagram and pin description

1.1 Block diagram

Figure 1. Block diagram

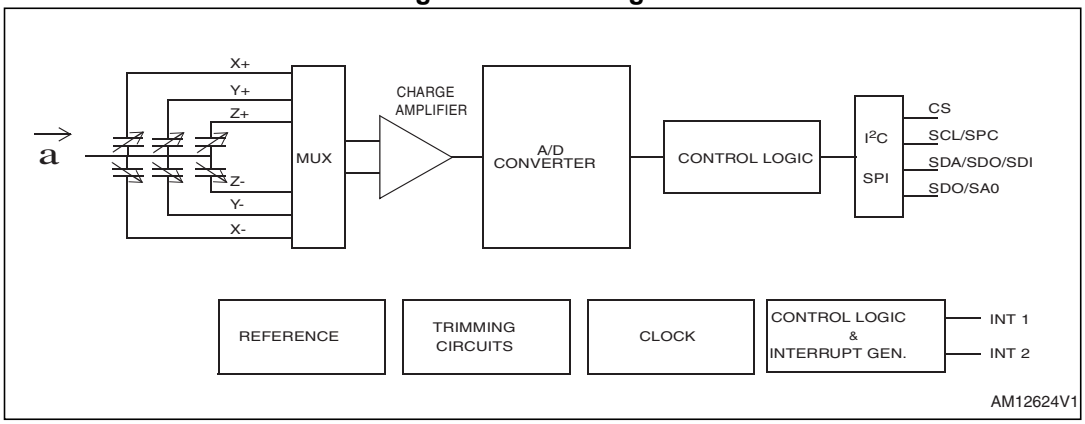

1.2 Pin description

Figure 2. Pin connections

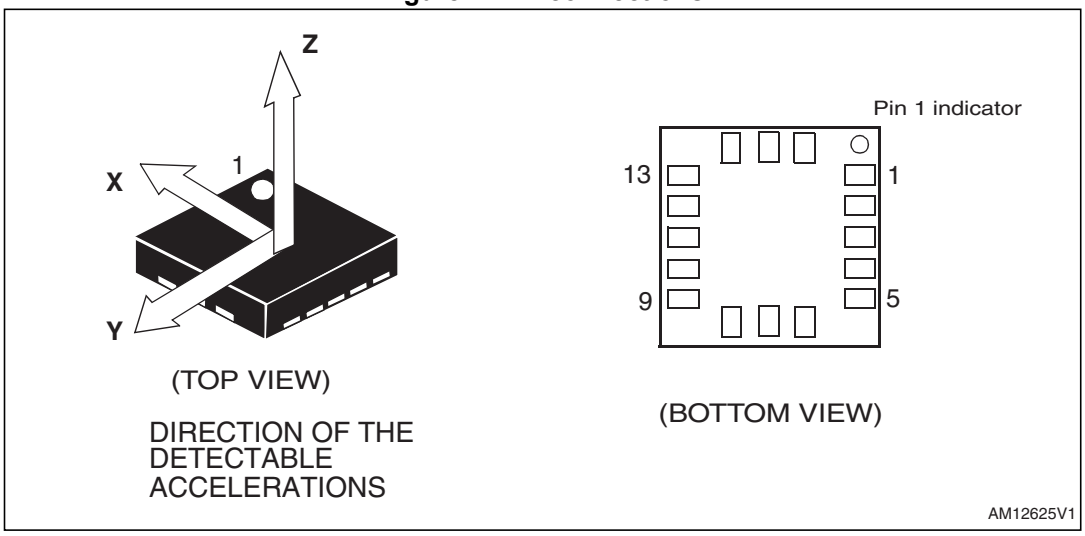

Downloaded from Arrow.com.

Table 2. Pin description

Pin#	Name	Function
1	Vdd_IO	Power supply for I/O pins
2	NC	Not connected
3	NC	Not connected
4	SCL SPC	I^2C serial clock (SCL) SPI serial port clock (SPC)
5	GND	0 V supply
6	SDA SDI SDO	I^2C serial data (SDA) SPI serial data input (SDI) 3-wire interface serial data output (SDO)
7	SDO SA0	SPI serial data output (SDO) I^2C less significant bit of the device address (SA0)
8	CS	SPI enable I^2C/SPI mode selection (1: I^2C mode; 0: SPI enabled)
9	INT 2	Inertial interrupt 2
10	Reserved	Connect to GND
11	INT 1	Inertial interrupt 1
12	GND	0 V supply
13	GND	0 V supply
14	Vdd	Power supply
15	Reserved	Connect to Vdd
16	GND	0 V supply

Downloaded from Arrow.com.

2 Mechanical and electrical specifications

2.1 Mechanical characteristics

@ Vdd = 2.5 V, T = 25 °C unless otherwise noted [a].

Table 3. Mechanical characteristics

Symbol	Parameter	Test conditions	Min.	Typ.[1]	Max.	Unit
FS	Measurement range[2]	FS bit set to 00		±100		*g*
		FS bit set to 01		±200		
		FS bit set to 11		±400		
So	Sensitivity[3]	FS bit set to 00 12-bit representation		49		m*g*/digit
		FS bit set to 01 12-bit representation		98		
		FS bit set to 11 12-bit representation		195		
TCSo	Sensitivity change vs. temperature	FS bit set to 00		±0.01		%/°C
TyOff	Typical zero-*g* level offset accuracy[4]	FS bit set to 00		±1		*g*
TCOff	Zero-*g* level change vs. temperature	Max. delta from 25 °C		±5		m*g*/°C
An	Acceleration noise density	FS bit set to 00		15		m*g*/$\sqrt{Hz}$
NL	Non-linearity	FS bit set to 00 Range -70g .. +70g		2		%FS
Top	Operating temperature range		-40		+85	°C
Wh	Product weight			20		mgram

1. Typical specifications are not guaranteed.
2. Verified by wafer level test and measurement of initial offset and sensitivity.
3. Factory calibrated at ±1 *g*
4. Offset can be eliminated by enabling the built-in high-pass filter.

a. The product is factory calibrated at 2.5 V. The operational power supply range is from 2.16 V to 3.6 V. The product calibration is done at ±1 *g*.

Downloaded from Arrow.com.

2.2 Electrical characteristics

@ Vdd = 2.5 V, T = 25 °C unless otherwise noted [(b)].

Table 4. Electrical characteristics

Symbol	Parameter	Test conditions	Min.	Typ.[(1)]	Max.	Unit
Vdd	Supply voltage		2.16	2.5	3.6	V
Vdd_IO	I/O pins supply voltage[(2)]		1.71		Vdd+0.1	V
Idd	Current consumption in normal mode			300		µA
IddLP	Current consumption in low-power mode			10		µA
IddPdn	Current consumption in power-down mode			1		µA
VIH	Digital high-level input voltage		0.8*Vdd_IO			V
VIL	Digital low-level input voltage				0.2*Vdd_IO	V
VOH	High-level output voltage		0.9*Vdd_IO			V
VOL	Low-level output voltage				0.1*Vdd_IO	V
ODR	Output data rate in normal mode	DR bit set to 00		50		Hz
		DR bit set to 01		100		
		DR bit set to 10		400		
		DR bit set to 11		1000		
ODR_{LP}	Output data rate in low-power mode	PM bit set to 010		0.5		Hz
		PM bit set to 011		1		
		PM bit set to 100		2		
		PM bit set to 101		5		
		PM bit set to 110		10		
BW	System bandwidth[(3)]			ODR/2		Hz
Ton	Turn-on time[(4)]	ODR = 100 Hz		1/ODR+1ms		s
Top	Operating temperature range		-40		+85	°C

1. Typical specifications are not guaranteed.
2. It is possible to remove Vdd maintaining Vdd_IO without blocking the communication busses; in this condition the measurement chain is powered off.
3. Refer to *Table 20* for filter cutoff frequency.
4. Time to obtain valid data after exiting power-down mode.

b. The product is factory calibrated at 2.5 V. The operational power supply range is from 2.16 V to 3.6 V.

Downloaded from Arrow.com.

2.3 Communication interface characteristics

2.3.1 SPI - serial peripheral interface

Subject to general operating conditions for Vdd and Top.

Table 5. SPI slave timing values

Symbol	Parameter	Value (1)		Unit
		Min.	Max.	
$t_{c(SPC)}$	SPI clock cycle	100		ns
$f_{c(SPC)}$	SPI clock frequency		10	MHz
$t_{su(CS)}$	CS setup time	6		ns
$t_{h(CS)}$	CS hold time	8		
$t_{su(SI)}$	SDI input setup time	5		
$t_{h(SI)}$	SDI input hold time	15		
$t_{v(SO)}$	SDO valid output time		50	
$t_{h(SO)}$	SDO output hold time	9		
$t_{dis(SO)}$	SDO output disable time		50	

1. Values are guaranteed at 10 MHz clock frequency for SPI with both 4 and 3 wires, based on characterization results, not tested in production.

Figure 3. SPI slave timing diagram (2)

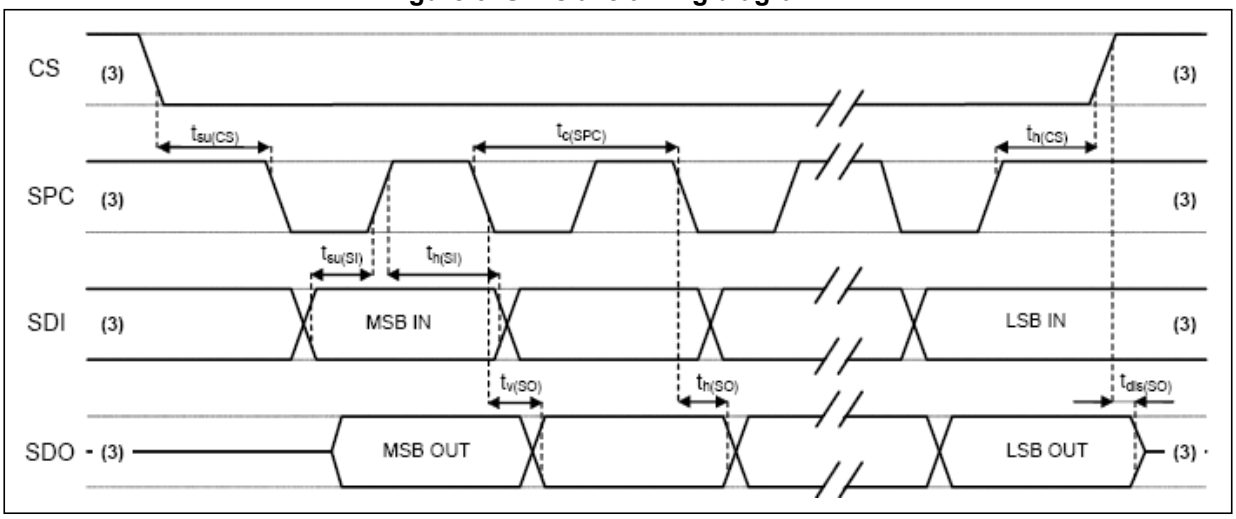

2. Measurement points are done at 0.2·Vdd_IO and 0.8·Vdd_IO, for both input and output ports.
3. When no communication is ongoing, data on CS, SPC, SDI and SDO are driven by internal pull-up resistors.

Downloaded from Arrow.com.

2.3.2 I²C - inter-IC control interface

Subject to general operating conditions for Vdd and Top.

Table 6. I²C slave timing values

Symbol	Parameter	I²C standard mode (1)		I²C fast mode (1)		Unit
		Min.	Max.	Min.	Max.	
$f_{(SCL)}$	SCL clock frequency	0	100	0	400	KHz
$t_{w(SCLL)}$	SCL clock low time	4.7		1.3		µs
$t_{w(SCLH)}$	SCL clock high time	4.0		0.6		µs
$t_{su(SDA)}$	SDA setup time	250		100		ns
$t_{h(SDA)}$	SDA data hold time	0.01	3.45	0.01	0.9	µs
$t_{r(SDA)}$ $t_{r(SCL)}$	SDA and SCL rise time		1000	$20 + 0.1C_b$ (2)	300	ns
$t_{f(SDA)}$ $t_{f(SCL)}$	SDA and SCL fall time		300	$20 + 0.1C_b$ (2)	300	ns
$t_{h(ST)}$	START condition hold time	4		0.6		µs
$t_{su(SR)}$	Repeated START condition setup time	4.7		0.6		µs
$t_{su(SP)}$	STOP condition setup time	4		0.6		µs
$t_{w(SP:SR)}$	Bus free time between STOP and START condition	4.7		1.3		µs

1. Data based on standard I²C protocol requirement, not tested in production.
2. C_b = total capacitance of one bus line, in pF.

Figure 4. I²C slave timing diagram

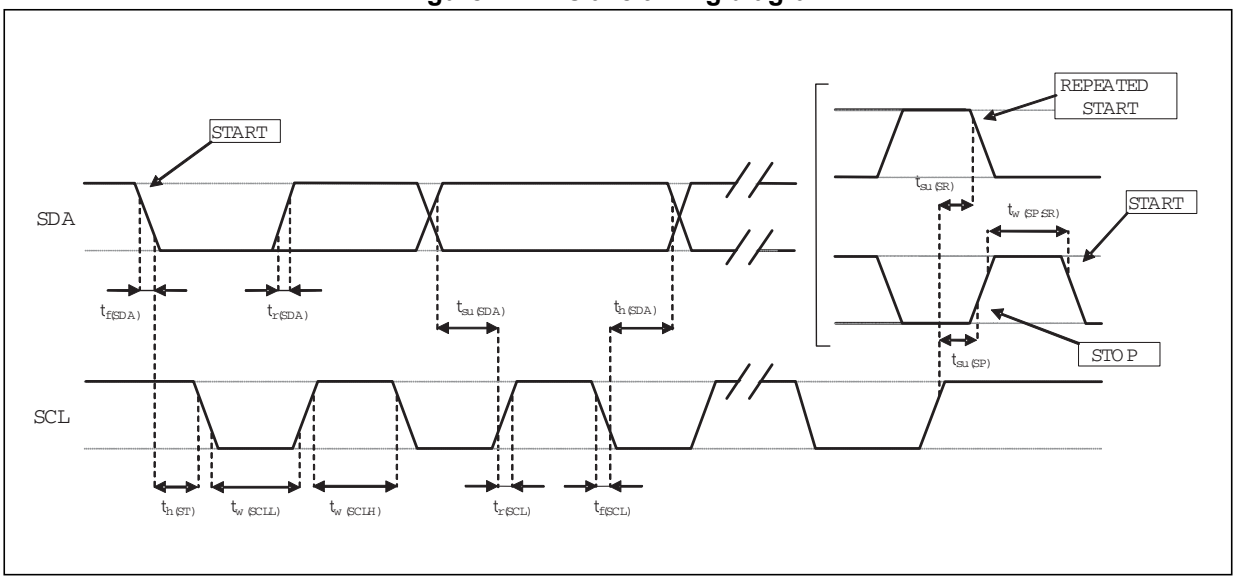

Note: Measurement points are done at 0.2·Vdd_IO and 0.8·Vdd_IO, for both ports.

Downloaded from Arrow.com.

2.4 Absolute maximum ratings

Stresses above those listed as “absolute maximum ratings” may cause permanent damage to the device. This is a stress rating only and functional operation of the device under these conditions is not implied. Exposure to maximum rating conditions for extended periods may affect device reliability.

Table 7. Absolute maximum ratings

Symbol	Ratings	Maximum value	Unit
Vdd	Supply voltage	-0.3 to 4.8	V
Vdd_IO	I/O pins supply voltage	-0.3 to 4.8	V
Vin	Input voltage on any control pin (CS, SCL/SPC, SDA/SDI/SDO, SDO/SA0)	-0.3 to Vdd_IO +0.3	V
A_{POW}	Acceleration (any axis, powered, Vdd = 2.5 V)	3000 *g* for 0.5 ms	
		10000 *g* for 0.1 ms	
A_{UNP}	Acceleration (any axis, unpowered)	3000 *g* for 0.5 ms	
		10000 *g* for 0.1 ms	
T_{OP}	Operating temperature range	-40 to +85	°C
T_{STG}	Storage temperature range	-40 to +125	°C
ESD	Electrostatic discharge protection	4 (HBM)	kV
		1.5 (CDM)	kV
		200 (MM)	V

Note: Supply voltage on any pin should never exceed 4.8 V.

This device is sensitive to mechanical shock, improper handling can cause permanent damage to the part.

This is an electrostatic-sensitive device (ESD), improper handling can cause permanent damage to the part.

Downloaded from Arrow.com.

2.5 Terminology

2.5.1 Sensitivity

Sensitivity describes the gain of the sensor and can be determined by applying 1 *g* acceleration to it. As the sensor can measure DC accelerations this can be done easily by pointing the axis of interest towards the center of the Earth, noting the output value, rotating the sensor by 180 degrees (pointing to the sky) and noting the output value again. By doing so, ±1 *g* acceleration is applied to the sensor. Subtracting the larger output value from the smaller one, and dividing the result by 2, leads to the actual sensitivity of the sensor. This value changes very little over temperature and time. The sensitivity tolerance describes the range of sensitivities of a large population of sensors.

2.5.2 Zero-*g* level

The zero-*g* level offset (TyOff) describes the deviation of an actual output signal from the ideal output signal if no acceleration is present. A sensor in a steady-state on a horizontal surface measures 0 *g* for the X-axis and 0 *g* for the Y-axis whereas the Z-axis measures 1 *g*. The output is ideally in the middle of the dynamic range of the sensor (content of OUT registers 00h, data expressed as two's complement number). A deviation from the ideal value in this case is called zero-*g* offset. Offset is, to some extent, a result of stress to the MEMS sensor and therefore can slightly change after mounting the sensor onto a printed circuit board or exposing it to extensive mechanical stress. Offset changes little over temperature, refer to "Zero-*g* level change vs. temperature" (see TCOff in *Table 3*). The zero-*g* level tolerance (TyOff) describes the standard deviation of the range of zero-*g* levels of a population of sensors.

2.5.3 Sleep-to-wakeup

The "sleep-to-wakeup" function, in conjunction with low-power mode, allows to further reduce the system power consumption and develop new smart applications.
The H3LIS331DL may be set in a low-power operating mode, characterized by lower date rate refreshments. In this way the device, even if sleeping, continues to sense acceleration and generate interrupt requests.
When the "sleep-to-wakeup" function is activated, the H3LIS331DL is able to automatically wake up as soon as the interrupt event has been detected, increasing the output data rate and bandwidth.
With this feature the system may be efficiently switched from low-power mode to full performance, depending on user-selectable positioning and acceleration events, therefore ensuring power saving and flexibility.

Downloaded from Arrow.com.

3 Functionality

The H3LIS331DL is a “nano”, low-power, digital output 3-axis linear accelerometer housed in an LGA package. The complete device includes a sensing element and an IC interface able to take the information from the sensing element and to provide a signal to the external world through an I^2C/SPI serial interface.

3.1 Sensing element

A proprietary process is used to create a surface micromachined accelerometer. The technology allows processing suspended silicon structures, which are attached to the substrate in a few points called anchors and are free to move in the direction of the sensed acceleration. To be compatible with traditional packaging techniques, a cap is placed on top of the sensing element to avoid blocking the moving parts during the molding phase of the plastic encapsulation.

When an acceleration is applied to the sensor, the proof mass displaces from its nominal position, causing an imbalance in the capacitive half bridge. This imbalance is measured using charge integration in response to a voltage pulse applied to the capacitor.

At steady-state the nominal value of the capacitors are a few pF and when an acceleration is applied, the maximum variation of the capacitive load is in the fF range.

3.2 IC interface

The complete measurement chain is composed of a low-noise capacitive amplifier which converts the capacitive unbalancing of the MEMS sensor into an analog voltage that will be available to the user through an analog-to-digital converter.

The acceleration data may be accessed through an I^2C/SPI interface, making the device particularly suitable for direct interfacing with a microcontroller.

The H3LIS331DL features a data-ready signal (RDY) which indicates when a new set of measured acceleration data is available, therefore simplifying data synchronization in the digital system that uses the device.

3.3 Factory calibration

The IC interface is factory calibrated for sensitivity (So) and zero-*g* level (TyOff).

The trim values are stored inside the device in non-volatile memory. Any time the device is turned on, the trim parameters are downloaded into the registers to be used during active operation. This allows the device to be used without further calibration.

Downloaded from Arrow.com.

4 Application hints

Figure 5. H3LIS331DL electrical connections

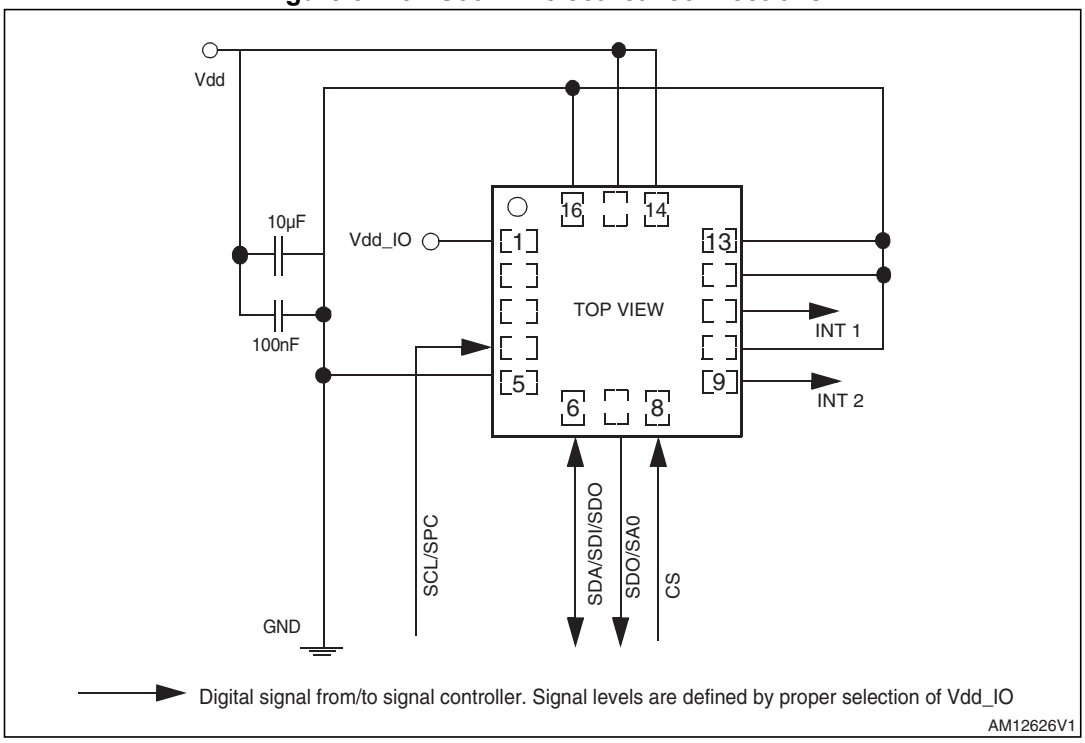

The device core is supplied through the Vdd line while the I/O pads are supplied through the Vdd_IO line. Power supply decoupling capacitors (100 nF ceramic, 10 µF aluminum) should be placed as near as possible to pin 14 of the device (common design practice).

All the voltage and ground supplies must be present at the same time to have proper behavior of the IC (refer to *Figure 5*). It is possible to remove Vdd maintaining Vdd_IO without blocking the communication bus, in this condition the measurement chain is powered off.

The functionality of the device and the measured acceleration data are selectable and accessible through the I^2C or SPI interfaces. When using the I^2C, CS must be tied high.

The functions, the threshold and the timing of the two interrupt pins (INT 1 and INT 2) can be completely programmed by the user through the I^2C/SPI interface.

4.1 Soldering information

The LGA package is compliant with the ECOPACK®, RoHS and “Green” standards.
It is qualified for soldering heat resistance according to JEDEC J-STD-020C.

Leave “pin 1 indicator” unconnected during soldering.

Land pattern and soldering recommendations are available at www.st.com.

Downloaded from Arrow.com.

5 Digital interfaces

The registers embedded inside the H3LIS331DL may be accessed through both the I^2C and SPI serial interfaces. The latter may be SW configured to operate either in 3-wire or 4-wire interface mode.

The serial interfaces are mapped onto the same pads. To select/exploit the I^2C interface, the CS line must be tied high (i.e. connected to Vdd_IO).

Table 8. Serial interface pin description

Pin name	Pin description
CS	SPI enable I^2C/SPI mode selection (1: I^2C mode; 0: SPI enabled)
SCL SPC	I^2C serial clock (SCL) SPI serial port clock (SPC)
SDA SDI SDO	I^2C serial data (SDA) SPI serial data input (SDI) 3-wire interface serial data output (SDO)
SA0 SDO	I^2C less significant bit of the device address (SA0) SPI serial data output (SDO)

5.1 I^2C serial interface

The H3LIS331DL I^2C is a bus slave. The I^2C is employed to write data into registers whose content can also be read back.

The relevant I^2C terminology is given in the table below.

Table 9. Serial interface pin description

Term	Description
Transmitter	The device which sends data to the bus
Receiver	The device which receives data from the bus
Master	The device which initiates a transfer, generates clock signals and terminates a transfer
Slave	The device addressed by the master

There are two signals associated with the I^2C bus: the serial clock line (SCL) and the serial data line (SDA). The latter is a bi-directional line used for sending and receiving the data to/from the interface. Both the lines are connected to Vdd_IO through a pull-up resistor embedded inside the H3LIS331DL. When the bus is free both lines are high.

The I^2C interface is compliant with fast mode (400 kHz) I^2C standards as well as with normal mode.

Downloaded from Arrow.com.

5.1.1 I²C operation

The transaction on the bus is started through a START (ST) signal. A START condition is defined as a high-to-low transition on the data line while the SCL line is held high. After this has been transmitted by the master, the bus is considered busy. The next byte of data transmitted after the START condition contains the address of the slave in the first 7 bits and the eighth bit tells whether the master is receiving data from the slave or transmitting data to the slave. When an address is sent, each device in the system compares the first seven bits after a START condition with its address. If they match, the device considers itself addressed by the master.

The slave address (SAD) associated to the H3LIS331DL is 001100xb. The **SDO**/**SA0** pad can be used to modify the less significant bit of the device address. If the SA0 pad is connected to the voltage supply, LSB is ‘1’ (address 0011001b) or else, if the SA0 pad is connected to ground, the LSB value is ‘0’ (address 0011000b). This solution allows the connection and addressing of two different accelerometers to the same I²C lines.

Data transfer with acknowledge is mandatory. The transmitter must release the SDA line during the acknowledge pulse. The receiver must then pull the data line low so that it remains stable low during the high period of the acknowledge clock pulse. A receiver which has been addressed is obliged to generate an acknowledge after each byte of data received.

The I²C embedded inside the H3LIS331DL behaves like a slave device and the following protocol must be adhered to. After the START condition (ST) a slave address is sent, once a slave acknowledge (SAK) has been returned, an 8-bit sub-address (SUB) is transmitted: the 7 LSB represent the actual register address while the MSB enables address auto increment. If the MSB of the SUB field is ‘1’, the SUB (register address) is automatically increased to allow multiple data read/write.

The slave address is completed with a Read/Write bit. If the bit is ‘1’ (read), a repeated START (SR) condition must be issued after the two sub-address bytes; if the bit is ‘0’ (write), the master transmits to the slave with the direction unchanged. *Table 10* explains how the SAD+Read/Write bit pattern is composed, listing all the possible configurations.

Table 10. SAD+Read/Write patterns

Command	SAD[6:1]	SAD[0] = SA0	R/W	SAD+R/W
Read	001100	0	1	00110001 (31h)
Write	001100	0	0	00110000 (30h)
Read	001100	1	1	00110011 (33h)
Write	001100	1	0	00110010 (32h)

Table 11. Transfer when master is writing one byte to slave

Master	ST	SAD + W		SUB		DATA		SP
Slave			SAK		SAK		SAK	

Downloaded from Arrow.com.

Table 12. Transfer when master is writing multiple bytes to slave

Master	ST	SAD + W		SUB		DATA		DATA		SP
Slave			SAK		SAK		SAK		SAK	

Table 13. Transfer when master is receiving (reading) one byte of data from slave

Master	ST	SAD + W		SUB		SR	SAD + R			NMAK	SP
Slave			SAK		SAK			SAK	DATA		

Table 14. Transfer when master is receiving (reading) multiple bytes of data from slave

Master	ST	SAD+W		SUB		SR	SAD+R			MAK		MAK		NMAK	SP
Slave			SAK		SAK			SAK	DATA		DATA		DATA		

Data are transmitted in byte format (DATA). Each data transfer contains 8 bits. The number of bytes transferred per transfer is unlimited. Data is transferred with the most significant bit (MSB) first. If a receiver can't receive another complete byte of data until it has performed some other function, it can hold the clock line SCL low to force the transmitter into a wait state. Data transfer only continues when the receiver is ready for another byte and releases the data line. If a slave receiver doesn't acknowledge the slave address (i.e. it is not able to receive because it is performing some real-time function) the data line must be left high by the slave. The master can then abort the transfer. A low-to-high transition on the SDA line while the SCL line is high is defined as a STOP condition. Each data transfer must be terminated by the generation of a STOP (SP) condition.

In order to read multiple bytes, it is necessary to assert the most significant bit of the sub-address field. In other words, SUB(7) must be equal to 1 while SUB(6-0) represents the address of first register to be read.

In the presented communication format MAK is master acknowledge and NMAK is no master acknowledge.

5.2 SPI bus interface

The H3LIS331DL SPI is a bus slave. The SPI allows the writing and reading of the device registers.

The serial interface interacts with the outside world with 4 wires: **CS**, **SPC**, **SDI** and **SDO**.

Downloaded from Arrow.com.

Figure 6. Read and write protocol

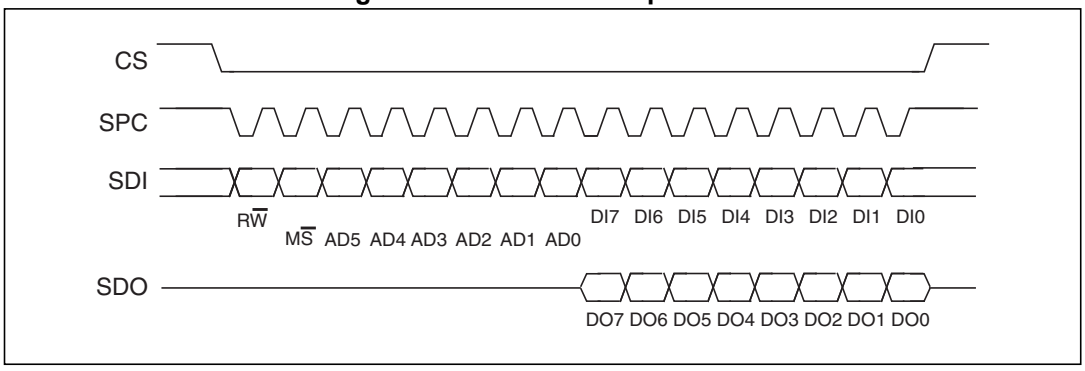

CS is the serial port enable and it is controlled by the SPI master. It goes low at the start of the transmission and goes back high at the end. **SPC** is the serial port clock and it is controlled by the SPI master. It is stopped high when **CS** is high (no transmission). **SDI** and **SDO** are respectively the serial port data input and output. Those lines are driven at the falling edge of **SPC** and should be captured at the rising edge of **SPC**.

Both the read register and write register commands are completed in 16 clock pulses or in multiples of 8 in the case of multiple read/write bytes. Bit duration is the time between two falling edges of **SPC**. The first bit (bit 0) starts at the first falling edge of **SPC** after the falling edge of **CS** while the last bit (bit 15, bit 23, ...) starts at the last falling edge of **SPC** just before the rising edge of **CS**.

bit 0: R$\overline{W}$ bit. When 0, the data DI(7:0) is written into the device. When 1, the data DO(7:0) from the device is read. In the latter case, the chip drives **SDO** at the start of bit 8.

bit 1: M$\overline{S}$ bit. When 0, the address remains unchanged in multiple read/write commands. When 1, the address is auto-incremented in multiple read/write commands.

bit 2-7: address AD(5:0). This is the address field of the indexed register.

bit 8-15: data DI(7:0) (write mode). This is the data that is written into the device (MSB first).

bit 8-15: data DO(7:0) (read mode). This is the data that is read from the device (MSB first).

In multiple read/write commands further blocks of 8 clock periods are added. When the M$\overline{S}$ bit is ‘0’, the address used to read/write data remains the same for every block. When the M$\overline{S}$ bit is ‘1’ the address used to read/write data is increased at every block.

The function and the behavior of **SDI** and **SDO** remain unchanged.

5.2.1 SPI read

Figure 7. SPI read protocol

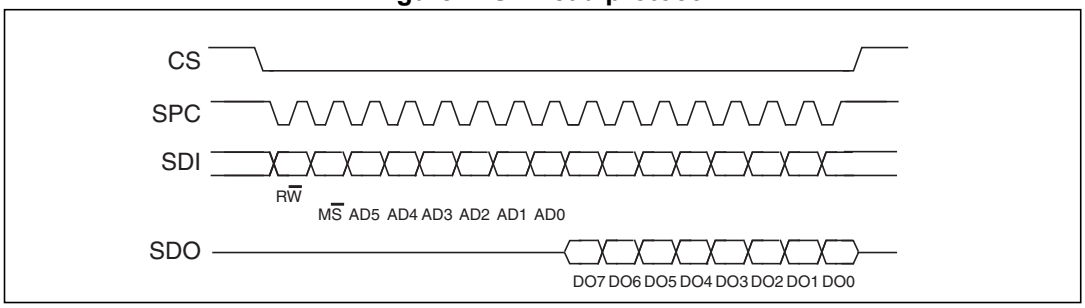

Downloaded from Arrow.com.

The SPI read command is performed with 16 clock pulses. A multiple byte read command is performed by adding blocks of 8 clock pulses to the previous one.

bit 0: READ bit. The value is 1.

bit 1: M$\overline{S}$ bit. When 0, does not increment the address. When 1, increments the address in multiple reads.

bit 2-7: address AD(5:0). This is the address field of the indexed register.

bit 8-15: data DO(7:0) (read mode). This is the data that is read from the device (MSB first).

bit 16-... : data DO(...-8). Further data in multiple byte reads.

Figure 8. Multiple byte SPI read protocol (2-byte example)

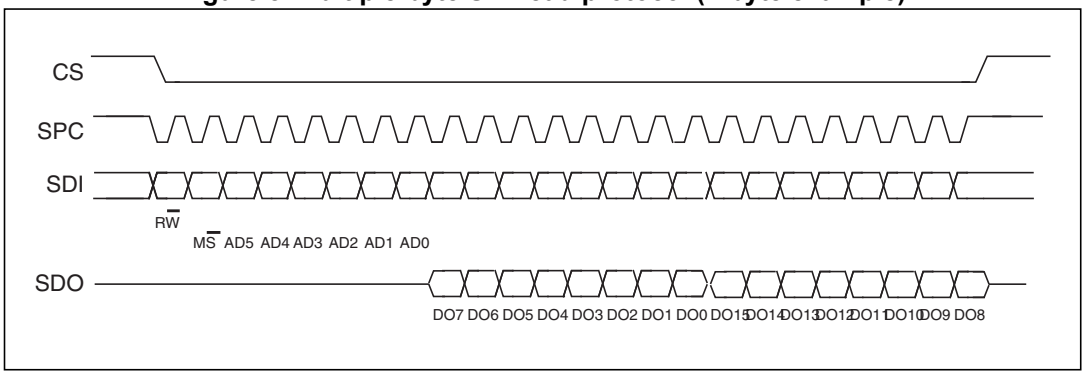

5.2.2 SPI write

Figure 9. SPI write protocol

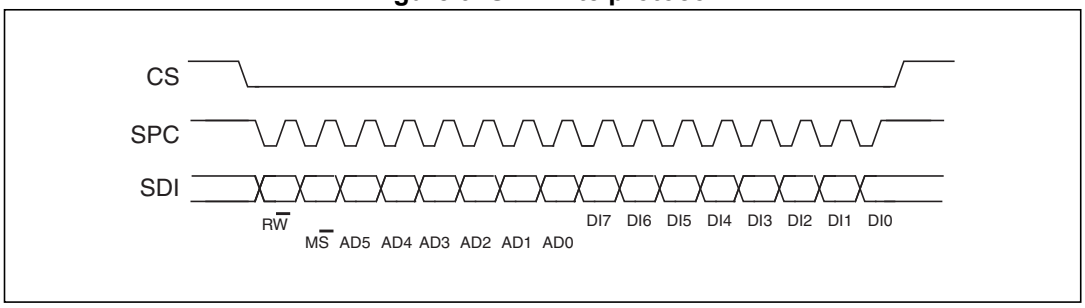

The SPI write command is performed with 16 clock pulses. A multiple byte write command is performed by adding blocks of 8 clock pulses to the previous one.

bit 0: WRITE bit. The value is 0.

bit 1: M$\overline{S}$ bit. When 0, does not increment the address. When 1, increments the address in multiple writes.

bit 2 -7: address AD(5:0). This is the address field of the indexed register.

bit 8-15: data DI(7:0) (write mode). This is the data that is written inside the device (MSB first).

bit 16-...: data DI(...-8). Further data in multiple byte writes.

Downloaded from Arrow.com.

Figure 10. Multiple byte SPI write protocol (2-byte example)

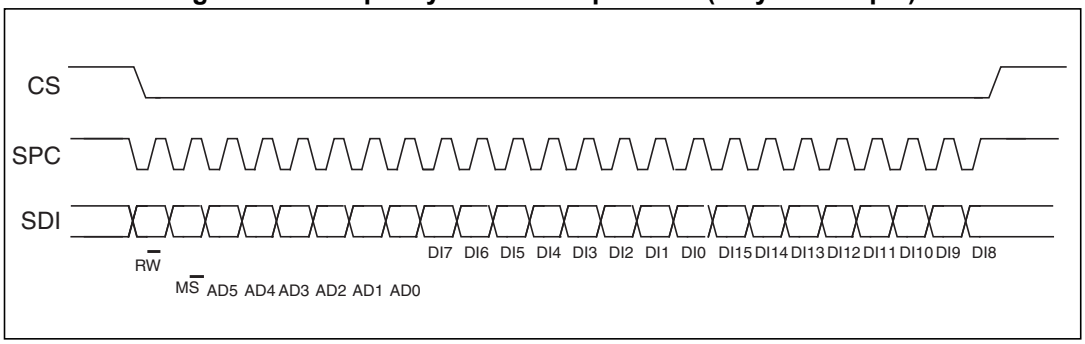

5.2.3 SPI read in 3-wire mode

3-wire mode is entered by setting bit SIM (SPI serial interface mode selection) to ‘1’ in CTRL_REG4.

Figure 11. SPI read protocol in 3-wire mode

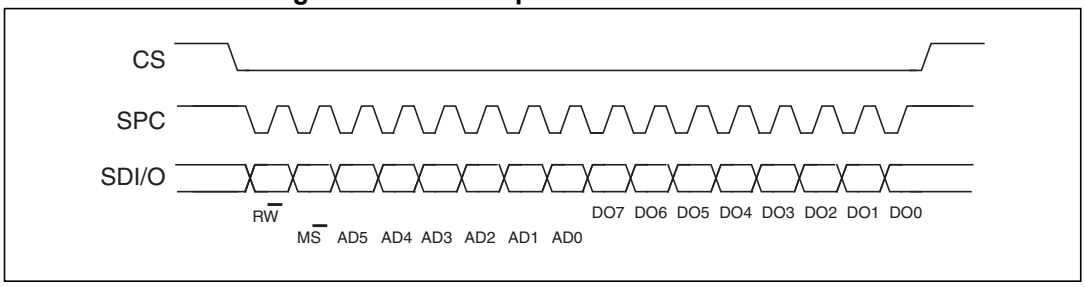

The SPI read command is performed with 16 clock pulses:

bit 0: READ bit. The value is 1.

bit 1: M$\overline{S}$ bit. When 0, does not increment the address. When 1, increments the address in multiple reads.

bit 2-7: address AD(5:0). This is the address field of the indexed register.

bit 8-15: data DO(7:0) (read mode). This is the data that is read from the device (MSB first).

The multiple read command is also available in 3-wire mode.

Downloaded from Arrow.com.

6 Register mapping

Table 15 provides a listing of the 8-bit registers embedded in the device and the related addresses.

Table 15. Register address map

Name	Type	Register address		Default	Comment
		Hex	Binary		
Reserved (do not modify)		00 - 0E			Reserved
WHO_AM_I	r	0F	000 1111	00110010	Dummy register
Reserved (do not modify)		10 - 1F			Reserved
CTRL_REG1	rw	20	010 0000	00000111	
CTRL_REG2	rw	21	010 0001	00000000	
CTRL_REG3	rw	22	010 0010	00000000	
CTRL_REG4	rw	23	010 0011	00000000	
CTRL_REG5	rw	24	010 0100	00000000	
HP_FILTER_RESET	r	25	010 0101		Dummy register
REFERENCE	rw	26	010 0110	00000000	
STATUS_REG	r	27	010 0111	00000000	
OUT_X_L	r	28	010 1000	Output	
OUT_X_H	r	29	010 1001	Output	
OUT_Y_L	r	2A	010 1010	Output	
OUT_Y_H	r	2B	010 1011	Output	
OUT_Z_L	r	2C	010 1100	Output	
OUT_Z_H	r	2D	010 1101	Output	
Reserved (do not modify)		2E - 2F			Reserved
INT1_CFG	rw	30	011 0000	00000000	
INT1_SRC	r	31	011 0001	00000000	
INT1_THS	rw	32	011 0010	00000000	
INT1_DURATION	rw	33	011 0011	00000000	
INT2_CFG	rw	34	011 0100	00000000	
INT2_SRC	r	35	011 0101	00000000	
INT2_THS	rw	36	011 0110	00000000	
INT2_DURATION	rw	37	011 0111	00000000	
Reserved (do not modify)		38 - 3F			Reserved

Registers marked as *Reserved* must not be changed as they contain the factory calibration values. Their content is automatically restored when the device is powered up. Writing to those registers may change calibration data and thus lead to improper functioning of the device.

Downloaded from Arrow.com.

7 Register description

The device contains a set of registers which are used to control its behavior and to retrieve acceleration data. The register address, consisting of 7 bits, is used to identify them and to write the data through the serial interface.

7.1 WHO_AM_I (0Fh)

Table 16. WHO_AM_I register

0	0	1	1	0	0	1	0

Device identification register.

This register contains the device identifier that for the H3LIS331DL is set to 32h.

7.2 CTRL_REG1 (20h)

Table 17. CTRL_REG1 register

PM2	PM1	PM0	DR1	DR0	Zen	Yen	Xen

Table 18. CTRL_REG1 description

PM2 - PM0	Power mode selection. Default value: 000 (000: power-down; Others: refer to *Table 19*)
DR1, DR0	Data rate selection. Default value: 00 (00:50 Hz; Others: refer to *Table 20*)
Zen	Z-axis enable. Default value: 1 (0: Z-axis disabled; 1: Z-axis enabled)
Yen	Y-axis enable. Default value: 1 (0: Y-axis disabled; 1: Y-axis enabled)
Xen	X-axis enable. Default value: 1 (0: X-axis disabled; 1: X-axis enabled)

The **PM** bits allow the user to select between power-down and two operating active modes. The device is in power-down mode when the PD bits are set to “000” (default value after boot). *Table 19* shows all the possible power mode configurations and respective output data rates. Output data in the low-power mode are computed with the low-pass filter cutoff frequency defined by the DR1, DR0 bits.

The **DR** bits, in normal mode operation, select the data rate at which acceleration samples are produced. In low-power modes they define the output data resolution. *Table 20* shows all the possible configurations for the DR1 and DR0 bits.

Downloaded from Arrow.com.

Table 19. Power mode and low-power output data rate configurations

PM2	PM1	PM0	Power mode selection	Output data rate [Hz] ODR_{LP}
0	0	0	Power-down	--
0	0	1	Normal mode	ODR
0	1	0	Low power	0.5
0	1	1	Low power	1
1	0	0	Low power	2
1	0	1	Low power	5
1	1	0	Low power	10

Table 20. Normal mode output data rate configurations and low-pass cutoff frequencies

DR1	DR0	Output data rate [Hz] ODR	Low-pass filter cutoff frequency [Hz]
0	0	50	37
0	1	100	74
1	0	400	292
1	1	1000	780

7.3 CTRL_REG2 (21h)

Table 21. CTRL_REG2 register

BOOT	HPM1	HPM0	FDS	HPen2	HPen1	HPCF1	HPCF0

Table 22. CTRL_REG2 description

BOOT	Reboot memory content. Default value: 0 (0: normal mode; 1: reboot memory content)
HPM1, HPM0	High-pass filter mode selection. Default value: 00 (00: normal mode; Others: refer to *Table 23*)
FDS	Filtered data selection. Default value: 0 (0: internal filter bypassed; 1: data from internal filter sent to output register)
HPen2	High-pass filter enabled for interrupt 2 source. Default value: 0 (0: filter bypassed; 1: filter enabled)

Downloaded from Arrow.com.

Table 22. CTRL_REG2 description (continued)

HPen1	High-pass filter enabled for interrupt 1 source. Default value: 0 (0: filter bypassed; 1: filter enabled)
HPCF1, HPCF0	High-pass filter cutoff frequency configuration. Default value: 00 (00: HPc=8; 01: HPc=16; 10: HPc=32; 11: HPc=64)

The **BOOT** bit is used to refresh the content of the internal registers stored in the Flash memory block. At device power-up, the content of the Flash memory block is transferred to the internal registers related to trimming functions in order to permit correct operation of the device itself. If for any reason the content of the trimming registers is changed, it is sufficient to use this bit to restore the correct values. When the BOOT bit is set to ‘1’, the content of the internal Flash is copied inside the corresponding internal registers and it is used to calibrate the device. These values are factory trimmed and they are different for every accelerometer. They permit correct operation of the device and normally they do not have to be changed. At the end of the boot process the BOOT bit is set again to ‘0’.

Table 23. High-pass filter mode configuration

HPM1	HPM0	High-pass filter mode
0	0	Normal mode (reset reading HP_RESET_FILTER)
0	1	Reference signal for filtering
1	0	Normal mode (reset reading HP_RESET_FILTER)

HPCF[1:0]. These bits are used to configure the high-pass filter cutoff frequency f_t which is given by:

$$f_t = \ln\left(1 - \frac{1}{HPc}\right) \cdot \frac{f_s}{2\pi}$$

The equation can be simplified to the following approximated equation:

$$f_t = \frac{f_s}{6 \cdot HPc}$$

Table 24. High-pass filter cutoff frequency configuration

HPcoeff2,1	f_t [Hz] Data rate = 50 Hz	f_t [Hz] Data rate = 100 Hz	f_t [Hz] Data rate = 400 Hz	f_t [Hz] Data rate = 1000 Hz
00	1	2	8	20
01	0.5	1	4	10
10	0.25	0.5	2	5
11	0.125	0.25	1	2.5

Downloaded from Arrow.com.

7.4 CTRL_REG3 [interrupt CTRL register] (22h)

Table 25. CTRL_REG3 register

IHL	PP_OD	LIR2	I2_CFG1	I2_CFG0	LIR1	I1_CFG1	I1_CFG0

Table 26. CTRL_REG3 description

IHL	Interrupt active high, low. Default value: 0 (0: active high; 1: active low)
PP_OD	Push-pull/open drain selection on interrupt pad. Default value 0. (0: push-pull; 1: open drain)
LIR2	Latch interrupt request on INT2_SRC register, with INT2_SRC register cleared by reading INT2_SRC itself. Default value: 0. (0: interrupt request not latched; 1: interrupt request latched)
I2_CFG1, I2_CFG0	Data signal on INT 2 pad control bits. Default value: 00. (see *Table 27*)
LIR1	Latch interrupt request on the INT1_SRC register, with the INT1_SRC register cleared by reading the INT1_SRC register. Default value: 0. (0: interrupt request not latched; 1: interrupt request latched)
I1_CFG1, I1_CFG0	Data signal on INT 1 pad control bits. Default value: 00. (see *Table 27*)

Table 27. Data signal on INT 1 and INT 2 pad

I1(2)_CFG1	I1(2)_CFG0	INT 1(2) Pad
0	0	Interrupt 1 (2) source
0	1	Interrupt 1 source OR interrupt 2 source
1	0	Data ready
1	1	Boot running

7.5 CTRL_REG4 (23h)

Table 28. CTRL_REG4 register

BDU	BLE	FS1	FS0	0	0	0	SIM

Downloaded from Arrow.com.

Table 29. CTRL_REG4 description

BDU	Block data update. Default value: 0 (0: continuous update; 1: output registers not updated between MSB and LSB reading)
BLE	Big/little endian data selection. Default value 0. (0: data LSB @ lower address; 1: data MSB @ lower address)
FS1, FS0	Full scale selection. Default value: 00. (00: ±100 *g*; 01: ±200 *g*; 11: ±400 *g*)
SIM	SPI serial interface mode selection. Default value: 0. (0: 4-wire interface; 1: 3-wire interface)

The **BDU** bit is used to inhibit output register updates between the reading of upper and lower register parts. In default mode (BDU = ‘0’), the lower and upper register parts are updated continuously. When the BDU is activated (BDU = ‘1’), the content of the output registers is not updated until both MSB and LSB are read which avoids reading values related to different sample times.

7.6 CTRL_REG5 (24h)

Table 30. CTRL_REG5 register

0	0	0	0	0	0	TurnOn1	TurnOn0

Table 31. CTRL_REG5 description

TurnOn1, TurnOn0	Turn-on mode selection for sleep-to-wake function. Default value: 00.

Turn-on bits are used for turning on the **sleep-to-wake** function.

Table 32. Sleep-to-wake configuration

TurnOn1	TurnOn0	Sleep-to-wake status
0	0	Sleep-to-wake function is disabled
1	1	Turned on: The device is in low-power mode (ODR is defined in CTRL_REG1)

Setting TurnOn[1:0] bits to 11, the “sleep-to-wake” function is enabled. When an interrupt event occurs, the device is turned to normal mode, increasing the ODR to the value defined in CTRL_REG1. Although the device is in normal mode, CTRL_REG1 content is not automatically changed to “normal mode” configuration.

Downloaded from Arrow.com.

7.7 HP_FILTER_RESET (25h)

Dummy register. Reading at this address zeroes instantaneously the content of the internal high-pass filter. If the high-pass filter is enabled, all three axes are instantaneously set to 0 *g*. This allows the settling time of the high-pass filter to be overcome.

7.8 REFERENCE (26h)

Table 33. REFERENCE register

Ref7	Ref6	Ref5	Ref4	Ref3	Ref2	Ref1	Ref0

Table 34. REFERENCE description

Ref7 - Ref0	Reference value for high-pass filter. Default value: 00h.

This register sets the acceleration value taken as a reference for the high-pass filter output.

When the filter is turned on (at least one of the FDS, HPen2, or HPen1 bits is equal to ‘1’) and the HPM bits are set to “01”, filter-out is generated, taking this value as a reference.

7.9 STATUS_REG (27h)

Table 35. STATUS_REG register

ZYXOR	ZOR	YOR	XOR	ZYXDA	ZDA	YDA	XDA

Table 36. STATUS_REG description

ZYXOR	X, Y and Z-axis data overrun. Default value: 0 (0: no overrun has occurred; 1: new data has overwritten the previous data before it was read)
ZOR	Z-axis data overrun. Default value: 0 (0: no overrun has occurred; 1: new data for the Z-axis has overwritten the previous data)
YOR	Y-axis data overrun. Default value: 0 (0: no overrun has occurred; 1: new data for the Y-axis has overwritten the previous data)
XOR	X-axis data overrun. Default value: 0 (0: no overrun has occurred; 1: new data for the X-axis has overwritten the previous data)
ZYXDA	X, Y and Z-axis new data available. Default value: 0 (0: a new set of data is not yet available; 1: a new set of data is available)

Downloaded from Arrow.com.

Table 36. STATUS_REG description (continued)

ZDA	Z-axis new data available. Default value: 0 (0: new data for the Z-axis is not yet available; 1: new data for the Z-axis is available)
YDA	Y-axis new data available. Default value: 0 (0: new data for the Y-axis is not yet available; 1: new data for the Y-axis is available)
XDA	X-axis new data available. Default value: 0 (0: new data for the X-axis is not yet available; 1: new data for the X-axis is available)

7.10 OUT_X_L (28h), OUT_X_H (29h)

X-axis acceleration data. The value is expressed as two's complement.

7.11 OUT_Y_L (2Ah), OUT_Y_H (2Bh)

Y-axis acceleration data. The value is expressed as two's complement.

7.12 OUT_Z_L (2Ch), OUT_Z_H (2Dh)

Z-axis acceleration data. The value is expressed as two's complement.

7.13 INT1_CFG (30h)

Table 37. INT1_CFG register

AOI	0	ZHIE	ZLIE	YHIE	YLIE	XHIE	XLIE

Table 38. INT1_CFG description

AOI	AND/OR combination of interrupt events. Default value: 0. (See *Table 39*)
ZHIE	Enable interrupt generation on Z high event. Default value: 0 (0: disable interrupt request; 1: enable interrupt request on measured accel. value higher than preset threshold)
ZLIE	Enable interrupt generation on Z low event. Default value: 0 (0: disable interrupt request; 1: enable interrupt request on measured accel. value lower than preset threshold)
YHIE	Enable interrupt generation on Y high event. Default value: 0 (0: disable interrupt request; 1: enable interrupt request on measured accel. value higher than preset threshold)
YLIE	Enable interrupt generation on Y low event. Default value: 0 (0: disable interrupt request; 1: enable interrupt request on measured accel. value lower than preset threshold)

Downloaded from Arrow.com.

Table 38. INT1_CFG description (continued)

XHIE	Enable interrupt generation on X high event. Default value: 0 (0: disable interrupt request; 1: enable interrupt request on measured accel. value higher than preset threshold)
XLIE	Enable interrupt generation on X low event. Default value: 0 (0: disable interrupt request; 1: enable interrupt request on measured accel. value lower than preset threshold)

Configuration register for interrupt 1 source.

Table 39. Interrupt 1 source configurations

AOI	Interrupt mode
0	OR combination of interrupt events
1	AND combination of interrupt events

7.14 INT1_SRC (31h)

Table 40. INT1_SRC register

0	IA	ZH	ZL	YH	YL	XH	XL

Table 41. INT1_SRC description

IA	Interrupt active. Default value: 0 (0: no interrupt has been generated; 1: one or more interrupts have been generated)
ZH	Z high. Default value: 0 (0: no interrupt, 1: Z high event has occurred)
ZL	Z low. Default value: 0 (0: no interrupt; 1: Z low event has occurred)
YH	Y high. Default value: 0 (0: no interrupt, 1: Y high event has occurred)
YL	Y low. Default value: 0 (0: no interrupt, 1: Y low event has occurred)
XH	X high. Default value: 0 (0: no interrupt, 1: X high event has occurred)
XL	X low. Default value: 0 (0: no interrupt, 1: X low event has occurred)

Interrupt 1 source register. Read-only register.

Reading at this address clears the INT1_SRC IA bit (and the interrupt signal on the INT 1 pin) and allows the refreshment of data in the INT1_SRC register if the latched option is chosen.

Downloaded from Arrow.com.

7.15 INT1_THS (32h)

Table 42. INT1_THS register

0	THS6	THS5	THS4	THS3	THS2	THS1	THS0

Table 43. INT1_THS description

THS6 - THS0	Interrupt 1 threshold. Default value: 000 0000

7.16 INT1_DURATION (33h)

Table 44. INT1_DURATION register

0	D6	D5	D4	D3	D2	D1	D0

Table 45. INT2_DURATION description

D6 - D0	Duration value. Default value: 000 0000

The **D6 - D0** bits set the minimum duration of the interrupt 2 event to be recognized. Duration steps and maximum values depend on the ODR chosen.

7.17 INT2_CFG (34h)

Table 46. INT2_CFG register

AOI	0	ZHIE	ZLIE	YHIE	YLIE	XHIE	XLIE

Table 47. INT2_CFG description

AOI	AND/OR combination of interrupt events. Default value: 0. (See *Table 48*)
ZHIE	Enable interrupt generation on Z high event. Default value: 0 (0: disable interrupt request; 1: enable interrupt request on measured accel. value higher than preset threshold)
ZLIE	Enable interrupt generation on Z low event. Default value: 0 (0: disable interrupt request; 1: enable interrupt request on measured accel. value lower than preset threshold)
YHIE	Enable interrupt generation on Y high event. Default value: 0 (0: disable interrupt request; 1: enable interrupt request on measured accel. value higher than preset threshold)
YLIE	Enable interrupt generation on Y low event. Default value: 0 (0: disable interrupt request; 1: enable interrupt request on measured accel. value lower than preset threshold)

Downloaded from Arrow.com.

Table 47. INT2_CFG description (continued)

XHIE	Enable interrupt generation on X high event. Default value: 0 (0: disable interrupt request; 1: enable interrupt request on measured accel. value higher than preset threshold)
XLIE	Enable interrupt generation on X low event. Default value: 0 (0: disable interrupt request; 1: enable interrupt request on measured accel. value lower than preset threshold)

Configuration register for interrupt 2 source.

Table 48. Interrupt mode configuration

AOI	Interrupt mode
0	OR combination of interrupt events
1	AND combination of interrupt events

7.18 INT2_SRC (35h)

Table 49. INT2_SRC register

0	IA	ZH	ZL	YH	YL	XH	XL

Table 50. INT2_SRC description

IA	Interrupt active. Default value: 0 (0: no interrupt has been generated; 1: one or more interrupts have been generated)
ZH	Z high. Default value: 0 (0: no interrupt, 1: Z high event has occurred)
ZL	Z low. Default value: 0 (0: no interrupt; 1: Z low event has occurred)
YH	Y high. Default value: 0 (0: no interrupt, 1: Y high event has occurred)
YL	Y low. Default value: 0 (0: no interrupt, 1: Y low event has occurred)
XH	X high. Default value: 0 (0: no interrupt, 1: X high event has occurred)
XL	X Low. Default value: 0 (0: no interrupt, 1: X low event has occurred)

Interrupt 2 source register. Read-only register.

Reading at this address clears the INT2_SRC IA bit (and the interrupt signal on the INT 2 pin) and allows the refreshment of data in the INT2_SRC register if the latched option is chosen.

Downloaded from Arrow.com.

7.19 INT2_THS (36h)

Table 51. INT2_THS register

0	THS6	THS5	THS4	THS3	THS2	THS1	THS0

Table 52. INT2_THS description

THS6 - THS0	Interrupt 1 threshold. Default value: 000 0000

7.20 INT2_DURATION (37h)

Table 53. INT2_DURATION register

0	D6	D5	D4	D3	D2	D1	D0

Table 54. INT2_DURATION description

D6 - D0	Duration value. Default value: 000 0000

The **D6 - D0** bits set the minimum duration of the interrupt 2 event to be recognized. Duration time steps and maximum values depend on the ODR chosen.

Downloaded from Arrow.com.

8 Package information

In order to meet environmental requirements, ST offers these devices in different grades of ECOPACK® packages, depending on their level of environmental compliance. ECOPACK specifications, grade definitions and product status are available at: www.st.com. ECOPACK is an ST trademark.

Downloaded from Arrow.com.

Table 55. TFLGA 3x3x1.0 mm^3 16L mechanical data

Dim.	mm		
	Min.	Typ.	Max.
A1			1
A2		0.785	
A3		0.200	
D1	2.850	3.000	3.150
E1	2.850	3.000	3.150
L1		1.000	1.060
L2		2.000	2.060
N1		0.500	
N2		1.000	
M	0.040	0.100	0.160
P1		0.875	
P2		1.275	
T1	0.290	0.350	0.410
T2	0.190	0.250	0.310
d		0.150	
k		0.050	

Figure 12. TFLGA 3x3x1.0 mm^3 16L mechanical drawing

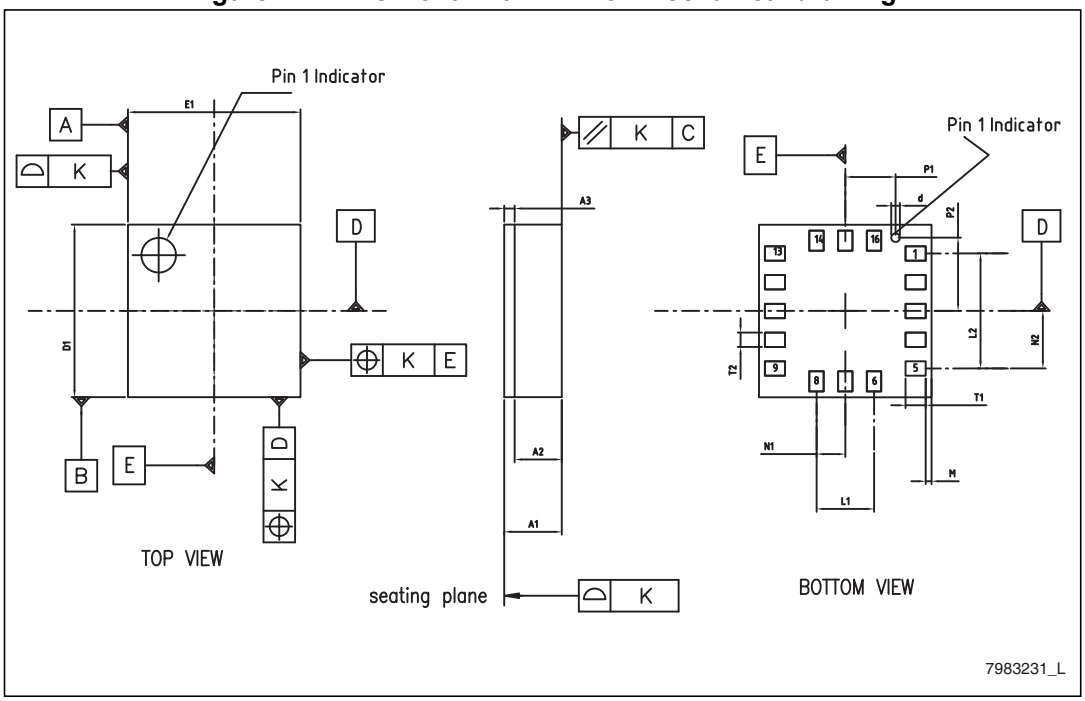

Downloaded from Arrow.com.

9 Revision history

Table 56. Document revision history

Date	Revision	Changes
20-Apr-2012	1	Initial release
16-Jul-2013	2	Document status promoted from preliminary data to production data Updated *Table 3* Minor textual updates
16-Sep-2013	3	Updated Company information appearing on last page of document

Downloaded from Arrow.com.

Please Read Carefully:

Information in this document is provided solely in connection with ST products. STMicroelectronics NV and its subsidiaries (“ST”) reserve the right to make changes, corrections, modifications or improvements, to this document, and the products and services described herein at any time, without notice.

All ST products are sold pursuant to ST’s terms and conditions of sale.

Purchasers are solely responsible for the choice, selection and use of the ST products and services described herein, and ST assumes no liability whatsoever relating to the choice, selection or use of the ST products and services described herein.

No license, express or implied, by estoppel or otherwise, to any intellectual property rights is granted under this document. If any part of this document refers to any third party products or services it shall not be deemed a license grant by ST for the use of such third party products or services, or any intellectual property contained therein or considered as a warranty covering the use in any manner whatsoever of such third party products or services or any intellectual property contained therein.

UNLESS OTHERWISE SET FORTH IN ST’S TERMS AND CONDITIONS OF SALE ST DISCLAIMS ANY EXPRESS OR IMPLIED WARRANTY WITH RESPECT TO THE USE AND/OR SALE OF ST PRODUCTS INCLUDING WITHOUT LIMITATION IMPLIED WARRANTIES OF MERCHANTABILITY, FITNESS FOR A PARTICULAR PURPOSE (AND THEIR EQUIVALENTS UNDER THE LAWS OF ANY JURISDICTION), OR INFRINGEMENT OF ANY PATENT, COPYRIGHT OR OTHER INTELLECTUAL PROPERTY RIGHT.

ST PRODUCTS ARE NOT DESIGNED OR AUTHORIZED FOR USE IN: (A) SAFETY CRITICAL APPLICATIONS SUCH AS LIFE SUPPORTING, ACTIVE IMPLANTED DEVICES OR SYSTEMS WITH PRODUCT FUNCTIONAL SAFETY REQUIREMENTS; (B) AERONAUTIC APPLICATIONS; (C) AUTOMOTIVE APPLICATIONS OR ENVIRONMENTS, AND/OR (D) AEROSPACE APPLICATIONS OR ENVIRONMENTS. WHERE ST PRODUCTS ARE NOT DESIGNED FOR SUCH USE, THE PURCHASER SHALL USE PRODUCTS AT PURCHASER’S SOLE RISK, EVEN IF ST HAS BEEN INFORMED IN WRITING OF SUCH USAGE, UNLESS A PRODUCT IS EXPRESSLY DESIGNATED BY ST AS BEING INTENDED FOR “AUTOMOTIVE, AUTOMOTIVE SAFETY OR MEDICAL” INDUSTRY DOMAINS ACCORDING TO ST PRODUCT DESIGN SPECIFICATIONS. PRODUCTS FORMALLY ESCC, QML OR JAN QUALIFIED ARE DEEMED SUITABLE FOR USE IN AEROSPACE BY THE CORRESPONDING GOVERNMENTAL AGENCY.

Resale of ST products with provisions different from the statements and/or technical features set forth in this document shall immediately void any warranty granted by ST for the ST product or service described herein and shall not create or extend in any manner whatsoever, any liability of ST.

ST and the ST logo are trademarks or registered trademarks of ST in various countries.
Information in this document supersedes and replaces all information previously supplied.
The ST logo is a registered trademark of STMicroelectronics. All other names are the property of their respective owners.

© 2013 STMicroelectronics - All rights reserved

STMicroelectronics group of companies

Australia - Belgium - Brazil - Canada - China - Czech Republic - Finland - France - Germany - Hong Kong - India - Israel - Italy - Japan - Malaysia - Malta - Morocco - Philippines - Singapore - Spain - Sweden - Switzerland - United Kingdom - United States of America

www.st.com

Downloaded from Arrow.com.