TL06xx Low-Power JFET-Input Operational Amplifiers

1 Features

- Very Low Power Consumption
- Typical Supply Current: 200 µA (Per Amplifier)
- Wide Common-Mode and Differential Voltage Ranges
- Low Input Bias and Offset Currents
- Common-Mode Input Voltage Range Includes V_{CC+}
- Output Short-Circuit Protection
- High Input Impedance: JFET-Input Stage
- Internal Frequency Compensation
- Latch-Up-Free Operation
- High Slew Rate: 3.5 V/µs Typical
- On Products Compliant to MIL-PRF-38535, All Parameters Are Tested Unless Otherwise Noted. On All Other Products, Production Processing Does Not Necessarily Include Testing of All Parameters.

2 Applications

- Tablets
- White goods
- Personal electronics
- Computers

3 Description

The JFET-input operational amplifiers of the TL06x series are designed as low-power versions of the TL08x series amplifiers. They feature high input impedance, wide bandwidth, high slew rate, and low input offset and input bias currents. The TL06x series features the same terminal assignments as the TL07x and TL08x series.

Device Information(1)

PART NUMBER	PACKAGE	BODY SIZE (NOM)
TL06xxD	SOIC (14)	8.65 mm × 3.91 mm
TL06xxJ	CDIP (14)	19.56 mm × 6.92 mm
TL06xxN	PDIP (14)	19.30 mm × 6.35 mm
TL06xxNS	SO (14)	10.30 mm × 5.30 mm
TL06xxPW	TSSOP (14)	5.00 mm × 4.40 mm

(1) For all available packages, see the orderable addendum at the end of the data sheet.

Schematic Symbol

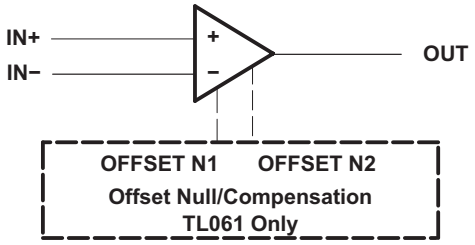

An IMPORTANT NOTICE at the end of this data sheet addresses availability, warranty, changes, use in safety-critical applications, intellectual property matters and other important disclaimers. PRODUCTION DATA.

Table of Contents

1 Features ... 1
2 Applications ... 1
3 Description ... 1
4 Revision History ... 2
5 Pin Configuration and Functions ... 3
6 Specifications ... 4
6.1 Absolute Maximum Ratings ... 4
6.2 ESD Ratings ... 5
6.3 Recommended Operating Conditions ... 5
6.4 Thermal Information - 8 Pins ... 5
6.5 Thermal Information - 14 Pins ... 5
6.6 Thermal Information - 20 Pins ... 6
6.7 Electrical Characteristics for TL06xC and TL06xxC ... 6
6.8 Electrical Characteristics for TL06xxC and TL06xI ... 7
6.9 Electrical Characteristics for TL06xM and TL064M ... 7
6.10 Operating Characteristics ... 8
6.11 Typical Characteristics ... 9
7 Parameter Measurement Information ... 13
8 Detailed Description ... 14
8.1 Overview ... 14
8.2 Functional Block Diagram ... 14
8.3 Feature Description ... 14
8.4 Device Functional Modes ... 15
9 Applications and Implementation ... 16
9.1 Application Information ... 16
9.2 Typical Applications ... 16
9.3 System Examples ... 17
10 Power Supply Recommendations ... 19
11 Layout ... 20
11.1 Layout Guidelines ... 20
11.2 Layout Examples ... 20
12 Device and Documentation Support ... 21
12.1 Documentation Support ... 21
12.2 Related Links ... 21
12.3 Community Resources ... 21
12.4 Trademarks ... 21
12.5 Electrostatic Discharge Caution ... 21
12.6 Glossary ... 21
13 Mechanical, Packaging, and Orderable Information ... 21

4 Revision History

NOTE: Page numbers for previous revisions may differ from page numbers in the current version.

Changes from Revision K (January 2014) to Revision L	Page
• Added *Applications*	1
• Added *Pin Configuration and Functions* section, *ESD Ratings* table, *Feature Description* section, *Device Functional Modes*, *Application and Implementation* section, *Power Supply Recommendations* section, *Layout* section, *Device and Documentation Support* section, and *Mechanical, Packaging, and Orderable Information* section	1

Changes from Revision J (September 2004) to Revision K	Page
• Updated document to new TI data sheet format - no specification changes.	1
• Deleted *Ordering Information* table.	1
• Updated *Features* with Military Disclaimer.	1

Copyright © 1978–2015, Texas Instruments Incorporated

5 Pin Configuration and Functions

TL061x D, P, and PS Package
8-Pin SOIC, PDIP, and SO
Top View

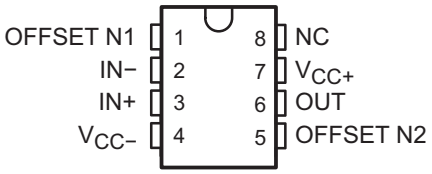

TL062x D, JG, P, PS, and PW Package
8-Pin SOIC, CDIP, PDIP, SO, and TSSOP
Top View

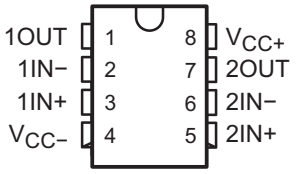

TL064x D, J, N, NS, PW, and W Package
14-Pin SOIC, CDIP, PDIP, SO, TSSOP and CFP
Top View

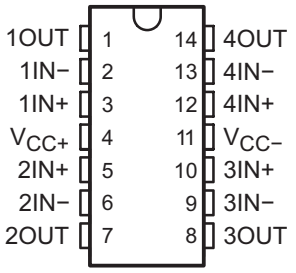

TL062 FK Package
20-Pin LCCC
Top View

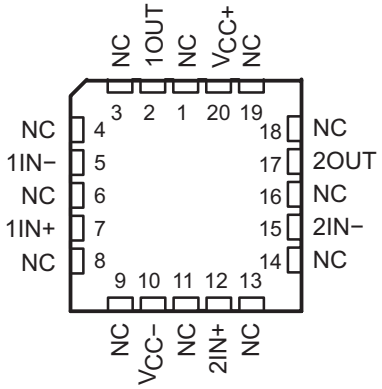

TL064 FK Package
20-Pin LCCC
Top View

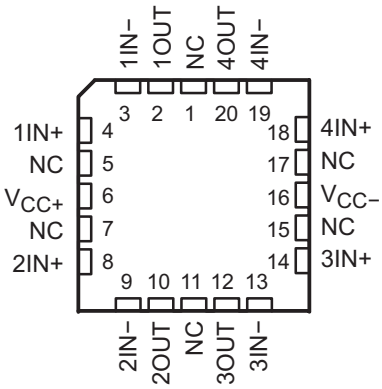

Pin Functions

PIN						TYPE	DESCRIPTION
NAME	TL061	TL062		TL064			
	D, P, PS	D, JG, P, PS, PW	FK	D, J, N, NS, PW, W	FK		
1IN–	—	2	5	2	3	I	Negative input
1IN+	—	3	7	3	4	I	Positive input
1OUT	—	1	2	1	2	O	Output
2IN–	—	6	15	6	9	I	Negative input
2IN+	—	5	12	5	8	I	Positive input
2OUT	—	7	17	7	10	O	Output
3IN–	—	—	—	9	13	I	Negative input
3IN+	—	—	—	10	14	I	Positive input
3OUT	—	—	—	8	12	O	Output
4IN–	—	—	—	13	19	I	Negative input
4IN+	—	—	—	12	18	I	Positive input
4OUT	—	—	—	14	20	O	Output
IN–	2	—	—	—	—	I	Negative input

Copyright © 1978–2015, Texas Instruments Incorporated

Pin Functions (continued)

PIN						TYPE	DESCRIPTION
NAME	TL061	TL062		TL064			
	D, P, PS	D, JG, P, PS, PW	FK	D, J, N, NS, PW, W	FK		
IN+	3	—	—	—	—	I	Positive input
NC	8	—	1	—	1	—	Do not connect
			3				
			4		5		
			6				
			8		7		
			9				
			11		11		
			13				
			14		15		
			16				
			18		17		
			19				
OFFSET N1	1	—	—	—	—	—	Input offset adjustment
OFFSET N2	5	—	—	—	—	—	Input offset adjustment
OUT	6	—	—	—	—	O	Output
V_{CC-}	4	4	10	11	16	—	Power supply
V_{CC+}	7	8	20	4	6	—	Power supply

6 Specifications

6.1 Absolute Maximum Ratings

over operating free-air temperature range (unless otherwise noted)[1]

			MIN	MAX	UNIT
V_{CC+}	Supply voltage[2]			18	V
V_{CC-}				–18	
V_{ID}	Differential input voltage[3]			±30	V
V_I	Input voltage[2][4]			±15	V
	Duration of output short circuit[5]		Unlimited		
T_J	Operating virtual junction temperature			150	°C
	Case temperature for 60 seconds	FK package		260	°C
	Lead temperature 1.6 mm (1/16 inch) from case for 60 seconds	J, JG, U, or W package		300	°C
	Lead temperature 1.6 mm (1/16 inch) from case for 10 seconds	D, N, NS, P, PS, or PW package		260	°C
T_{stg}	Storage temperature		–65	150	°C

(1) Stresses beyond those listed under *Absolute Maximum Ratings* may cause permanent damage to the device. These are stress ratings only, and functional operation of the device at these or any other conditions beyond those indicated under *Recommended Operating Conditions* is not implied. Exposure to absolute-maximum-rated conditions for extended periods may affect device reliability.
(2) All voltage values, except differential voltages, are with respect to the midpoint between V_{CC+} and V_{CC-}.
(3) Differential voltages are at IN+, with respect to IN−.
(4) The magnitude of the input voltage must never exceed the magnitude of the supply voltage or 15 V, whichever is less.
(5) The output may be shorted to ground or to either supply. Temperature and/or supply voltages must be limited to ensure that the dissipation rating is not exceeded.

Copyright © 1978–2015, Texas Instruments Incorporated

6.2 ESD Ratings

			VALUE	UNIT
$V_{(ESD)}$	Electrostatic discharge	Human body model (HBM), per ANSI/ESDA/JEDEC JS-001 (1)	2000	V
		Charged-device model (CDM), per JEDEC specification JESD22-C101 (2)	2000	

(1) JEDEC document JEP155 states that 500-V HBM allows safe manufacturing with a standard ESD control process.
(2) JEDEC document JEP157 states that 250-V CDM allows safe manufacturing with a standard ESD control process.

6.3 Recommended Operating Conditions

over operating free-air temperature range (unless otherwise noted)

			MIN	MAX	UNIT
V_{CC+}	Supply voltage		5	15	V
V_{CC-}	Supply voltage		–5	–15	V
V_{CM}	Common-mode voltage		V_{CC-} + 4	V_{CC+} – 4	V
T_A	Ambient temperature	TL06xM	–55	125	°C
		TL06xQ	–40	125	
		TL06xI	–40	85	
		TL06xC	0	70	

6.4 Thermal Information - 8 Pins

THERMAL METRIC (1)		TL06xx					UNIT
		D (SOIC)	P (PDIP)	PS (SO)	PW (TSSOP)	JG (CDIP)	
		8 PINS	8 PINS	8 PINS	8 PINS	8 PINS	
$R_{\theta JA}$	Junction-to-ambient thermal resistance (2) (3)	97	85	95	149	—	°C/W
$R_{\theta JC(top)}$	Junction-to-case (top) thermal resistance (4) (5)	—	—	—	—	14.5	°C/W

(1) For more information about traditional and new thermal metrics, see the *Semiconductor and IC Package Thermal Metrics* application report, SPRA953.
(2) Maximum power dissipation is a function of $T_{J(max)}$, $R_{\theta JA}$, and T_A. The maximum allowable power dissipation at any allowable ambient temperature is $P_D = (T_{J(max)} – T_A)/R_{\theta JA}$. Operating at the absolute maximum T_J of 150°C can affect reliability.
(3) The package thermal impedance is calculated in accordance with JESD 51-7.
(4) Maximum power dissipation is a function of $T_{J(max)}$, $R_{\theta JC}$, and T_C. The maximum allowable power dissipation at any allowable ambient temperature is $P_D = (T_{J(max)} – T_C) / R_{\theta JC}$. Operating at the absolute maximum T_J of 150°C can affect reliability.
(5) The package thermal impedance is calculated in accordance with MIL-STD-883.

6.5 Thermal Information - 14 Pins

THERMAL METRIC (1)		TL06xx							UNIT
		D (SOIC)	N (PDIP)	NS (SO)	PS (SO)	PW (TSSOP)	J (CDIP)	W (CFP)	
		14 PINS	14 PINS	14 PINS	8 PINS	14 PINS	14 PINS	14 PINS	
$R_{\theta JA}$	Junction-to-ambient thermal resistance (2) (3)	86	80	76	95	113	—	—	°C/W
$R_{\theta JC(top)}$	Junction-to-case (top) thermal resistance (2) (3)	—	—	—	—	—	15.05	14.65	°C/W

(1) For more information about traditional and new thermal metrics, see the *Semiconductor and IC Package Thermal Metrics* application report, SPRA953.
(2) Maximum power dissipation is a function of $T_{J(max)}$, $R_{\theta JC}$, and T_C. The maximum allowable power dissipation at any allowable ambient temperature is $P_D = (T_{J(max)} – T_C) / R_{\theta JC}$. Operating at the absolute maximum T_J of 150°C can affect reliability.
(3) The package thermal impedance is calculated in accordance with MIL-STD-883.

Copyright © 1978–2015, Texas Instruments Incorporated

6.6 Thermal Information - 20 Pins

THERMAL METRIC[1]		TL06xx FK (LCCC) 20 PINS	UNIT
$R_{\theta JA}$	Junction-to-ambient thermal resistance[2][3]	—	°C/W
$R_{\theta JC(top)}$	Junction-to-case (top) thermal resistance[4][5]	5.61	°C/W

(1) For more information about traditional and new thermal metrics, see the *Semiconductor and IC Package Thermal Metrics* application report, SPRA953.
(2) Maximum power dissipation is a function of $T_{J(max)}$, $R_{\theta JA}$, and T_A. The maximum allowable power dissipation at any allowable ambient temperature is $P_D = (T_{J(max)} – T_A)/R_{\theta JA}$. Operating at the absolute maximum T_J of 150°C can affect reliability.
(3) The package thermal impedance is calculated in accordance with JESD 51-7.
(4) Maximum power dissipation is a function of $T_{J(max)}$, $R_{\theta JC}$, and T_C. The maximum allowable power dissipation at any allowable ambient temperature is $P_D = (T_{J(max)} – T_C) / R_{\theta JC}$. Operating at the absolute maximum T_J of 150°C can affect reliability.
(5) The package thermal impedance is calculated in accordance with MIL-STD-883.

6.7 Electrical Characteristics for TL06xC and TL06xxC

$V_{CC\pm}$ = ±15 V (unless otherwise noted)

PARAMETER		TEST CONDITIONS[1]		TL061C, TL062C, TL064C			TL061AC, TL062AC, TL064AC			UNIT
				MIN	TYP	MAX	MIN	TYP	MAX	
V_{IO}	Input offset voltage	V_O = 0, R_S = 50 Ω	T_A = 25°C		3	15		3	6	mV
			T_A = Full range			20			7.5	
α_{VIO}	Temperature coefficient of input offset voltage	V_O = 0, R_S = 50 Ω, T_A = Full range			10			10		μV/°C
I_{IO}	Input offset current	V_O = 0	T_A = 25°C		5	200		5	100	pA
			T_A = Full range			5			3	nA
I_{IB}	Input bias current[2]	V_O = 0	T_A = 25°C		30	400		30	200	pA
			T_A = Full range			10			7	nA
V_{ICR}	Common-mode input voltage range	T_A = 25°C		±11	–12 to 15		±11	–12 to 15		V
V_{OM}	Maximum peak output voltage swing	R_L = 10 kΩ, T_A = 25°C		±10	±13.5		±10	±13.5		V
		R_L ≥ 10 kΩ, T_A = Full range		±10			±10			
A_{VD}	Large-signal differential voltage amplification	V_O = ±10 V, R_L ≥ 2 kΩ	T_A = 25°C	3	6		4	6		V/mV
			T_A = Full range	3			4			
B_1	Unity-gain bandwidth	R_L = 10 kΩ, T_A = 25°C			1			1		MHz
r_i	Input resistance	T_A = 25°C			10^{12}			10^{12}		Ω
CMRR	Common-mode rejection ratio	$V_{IC} = V_{ICR}$min, V_O = 0, R_S = 50 Ω, T_A = 25°C		70	86		80	86		dB
k_{SVR}	Supply-voltage rejection ratio ($\Delta V_{CC\pm}/\Delta V_{IO}$)	V_{CC} = ±9 V to ±15 V, V_O = 0, R_S = 50 Ω, T_A = 25°C		70	95		80	95		dB
P_D	Total power dissipation (each amplifier)	V_O = 0, No load, T_A = 25°C			6	7.5		6	7.5	mW
I_{CC}	Supply current (each amplifier)	V_O = 0, No load, T_A = 25°C			200	250		200	250	μA
V_{O1}/V_{O2}	Crosstalk attenuation	A_{VD} = 100, T_A = 25°C			120			120		dB

(1) All characteristics are measured under open-loop conditions with zero common-mode input voltage unless otherwise specified. Full range for T_A is 0°C to 70°C for TL06xC, TL06xAC, and TL06xBC and –40°C to 85°C for TL06xI.
(2) Input bias currents of an FET-input operational amplifier are normal junction reverse currents, which are temperature sensitive, as shown in Figure 12. Pulse techniques are used to maintain the junction temperature as close to the ambient temperature as possible.

Copyright © 1978–2015, Texas Instruments Incorporated

6.8 Electrical Characteristics for TL06xxC and TL06xI

$V_{CC\pm}$ = ±15 V (unless otherwise noted)

PARAMETER		TEST CONDITIONS[1]		TL061BC, TL062BC, TL064BC			TL061I, TL062I, TL064I			UNIT
				MIN	TYP	MAX	MIN	TYP	MAX	
V_{IO}	Input offset voltage	V_O = 0, R_S = 50 Ω	T_A = 25°C		2	3		3	6	mV
			T_A = Full range			5			9	
α_{VIO}	Temperature coefficient of input offset voltage	V_O = 0, R_S = 50 Ω, T_A = Full range			10			10		μV/°C
I_{IO}	Input offset current	V_O = 0	T_A = 25°C		5	100		5	100	pA
			T_A = Full range			3			10	nA
I_{IB}	Input bias current[2]	V_O = 0	T_A = 25°C		30	200		30	200	pA
			T_A = Full range			7			20	nA
V_{ICR}	Common-mode input voltage range	T_A = 25°C		±11	–12 to 15		±11	–12 to 15		V
V_{OM}	Maximum peak output voltage swing	R_L = 10 kΩ, T_A = 25°C		±10	±13.5		±10	±13.5		V
		R_L ≥ 10 kΩ, T_A = Full range		±10			±10			
A_{VD}	Large-signal differential voltage amplification	V_O = ±10 V, R_L ≥ 2 kΩ	T_A = 25°C	4	6		4	6		V/mV
			T_A = Full range	4			4			
B_1	Unity-gain bandwidth	R_L = 10 kΩ, T_A = 25°C			1			1		MHz
r_i	Input resistance	T_A = 25°C			10^{12}			10^{12}		Ω
CMRR	Common-mode rejection ratio	V_{IC} = V_{ICR}min, V_O = 0, R_S = 50 Ω, T_A = 25°C		80	86		80	86		dB
k_{SVR}	Supply-voltage rejection ratio ($\Delta V_{CC\pm}/\Delta V_{IO}$)	V_{CC} = ±9 V to ±15 V, V_O = 0, R_S = 50 Ω, T_A = 25°C		80	95		80	95		dB
P_D	Total power dissipation (each amplifier)	V_O = 0, No load, T_A = 25°C			6	7.5		6	7.5	mW
I_{CC}	Supply current (each amplifier)	V_O = 0, No load, T_A = 25°C			200	250		200	250	μA
V_{O1}/V_{O2}	Crosstalk attenuation	A_{VD} = 100, T_A = 25°C			120			120		dB

(1) All characteristics are measured under open-loop conditions with zero common-mode input voltage, unless otherwise specified. Full range for T_A is 0°C to 70°C for TL06xC, TL06xAC, and TL06xBC and –40°C to 85°C for TL06xI.
(2) Input bias currents of an FET-input operational amplifier are normal junction reverse currents, which are temperature sensitive, as shown in Figure 12. Pulse techniques are used to maintain the junction temperature as close to the ambient temperature as possible.

6.9 Electrical Characteristics for TL06xM and TL064M

$V_{CC\pm}$ = ±15 V (unless otherwise noted)

PARAMETER		TEST CONDITIONS[1]		TL061M, TL062M			TL064M			UNIT
				MIN	TYP	MAX	MIN	TYP	MAX	
V_{IO}	Input offset voltage	V_O = 0, R_S = 50 Ω	T_A = 25°C		3	6		3	9	mV
			T_A = –55°C to 125°C			9			15	
α_{VIO}	Temperature coefficient of input offset voltage	V_O = 0, R_S = 50 Ω, T_A = –55°C to 125°C			10			10		μV/°C
I_{IO}	Input offset current	V_O = 0	T_A = 25°C		5	100		5	100	pA
			T_A = –55°C			20[2]			20[2]	nA
			T_A = 125°C			20			20	
I_{IB}	Input bias current[3]	V_O = 0	T_A = 25°C		30	200		30	200	pA
			T_A = –55°C			50[2]			50[2]	nA
			T_A = 125°C			50			50	
V_{ICR}	Common-mode input voltage range	T_A = 25°C		±11	–12 to 15		±11	–12 to 15		V

(1) All characteristics are measured under open-loop conditions, with zero common-mode voltage, unless otherwise specified.
(2) This parameter is not production tested.
(3) Input bias currents of an FET-input operational amplifier are normal junction reverse currents, which are temperature sensitive, as shown in Figure 12. Pulse techniques are used to maintain the junction temperature as close to the ambient temperature as possible.

Copyright © 1978–2015, Texas Instruments Incorporated

Electrical Characteristics for TL06xM and TL064M (continued)

$V_{CC\pm}$ = ±15 V (unless otherwise noted)

PARAMETER		TEST CONDITIONS[1]		TL061M, TL062M			TL064M			UNIT
				MIN	TYP	MAX	MIN	TYP	MAX	
V_{OM}	Maximum peak output voltage swing	R_L = 10 kΩ, T_A = 25°C		±10	±13.5		±10	±13.5		V
		R_L ≥ 10 kΩ, T_A = –55°C to 125°C		±10			±10			
A_{VD}	Large-signal differential voltage amplification	V_O = ±10 V, R_L ≥ 2 kΩ	T_A = 25°C	4	6		4	6		V/mV
			T_A = –55°C to 125°C	4			4			
B_1	Unity-gain bandwidth	R_L = 10 kΩ, T_A = 25°C								MHz
r_i	Input resistance	T_A = 25°C			10^{12}			10^{12}		Ω
CMRR	Common-mode rejection ratio	V_{IC} = V_{ICR}min, V_O = 0, R_S = 50 Ω, T_A = 25°C		80	86		80	86		dB
k_{SVR}	Supply-voltage rejection ratio ($\Delta V_{CC\pm}/\Delta V_{IO}$)	V_{CC} = ±9 V to ±15 V, V_O = 0, R_S = 50 Ω, T_A = 25°C		80	95		80	95		dB
P_D	Total power dissipation (each amplifier)	V_O = 0, No load, T_A = 25°C			6	7.5		6	7.5	mW
I_{CC}	Supply current (each amplifier)	V_O = 0, No load, T_A = 25°C			200	250		200	250	µA
V_{O1}/V_{O2}	Crosstalk attenuation	A_{VD} = 100, T_A = 25°C			120			120		dB

6.10 Operating Characteristics

$V_{CC\pm}$ = ±15 V, T_A= 25°C

PARAMETER		TEST CONDITIONS		MIN	TYP	MAX	UNIT
SR	Slew rate at unity gain[1]	V_I = 10 V, R_L = 10 kΩ,	C_L = 100 pF, see Figure 16	1.5	3.5		V/µs
t_r	Rise-time	V_I = 20 V, R_L = 10 kΩ,	C_L = 100 pF, see Figure 16		0.2		µs
	Overshoot factor				10%		
V_n	Equivalent input noise voltage	R_S = 20 Ω	f = 1 kHz		42		nV/√Hz

(1) Slew rate at –55°C to 125°C is 0.7 V/µs min.

Copyright © 1978–2015, Texas Instruments Incorporated

6.11 Typical Characteristics

Data at high and low temperatures are applicable only within the specified operating free-air temperature ranges of the various devices.

Table 1. Table of Graphs

	FIGURE
Maximum peak output voltage versus Supply voltage	Figure 1
Maximum peak output voltage versus Free-air temperature	Figure 2
Maximum peak output voltage versus Load resistance	Figure 3
Maximum peak output voltage versus Frequency	Figure 4
Differential voltage amplification versus Free-air temperature	Figure 5
Large-signal differential voltage amplification versus Frequency	Figure 6
Phase shift versus Frequency	Figure 6
Supply current versus Supply voltage	Figure 7
Supply current versus Free-air temperature	Figure 8
Total power dissipation versus Free-air temperature	Figure 9
Common-mode rejection ratio versus Free-air temperature	Figure 10
Normalized unity-gain bandwidth versus Free-air temperature	Figure 11
Normalized slew rate versus Free-air temperature	Figure 11
Normalized phase shift versus Free-air temperature	Figure 11
Input bias current versus Free-air temperature	Figure 12
Voltage-follower large-signal pulse response versus Time	Figure 13
Output voltage versus Elapsed time	Figure 14
Equivalent input noise voltage versus Frequency	Figure 15

Copyright © 1978–2015, Texas Instruments Incorporated

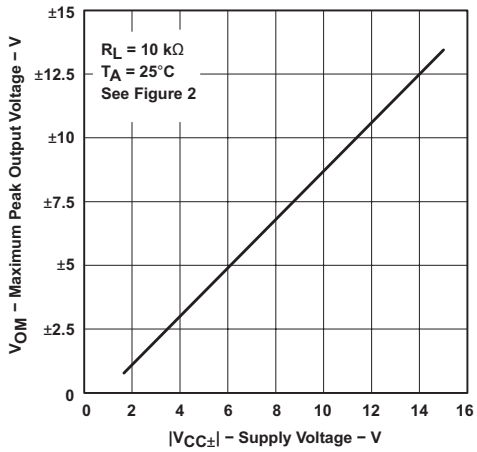

Figure 1. Maximum Peak Output Voltage vs Supply Voltage

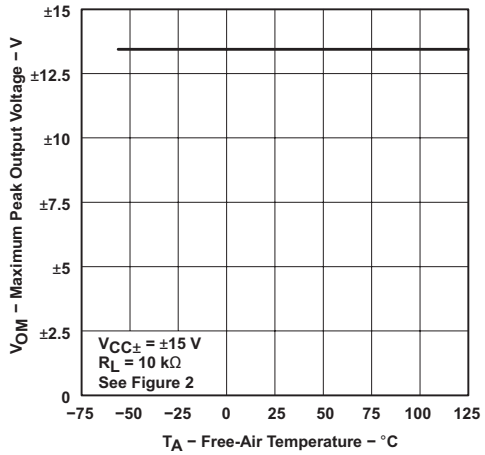

Figure 2. Maximum Peak Output Voltage vs Free-Air Temperature

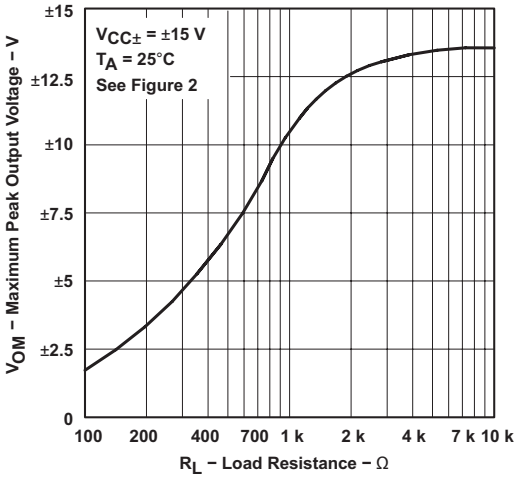

Figure 3. Maximum Peak Output Voltage vs Load Resistance

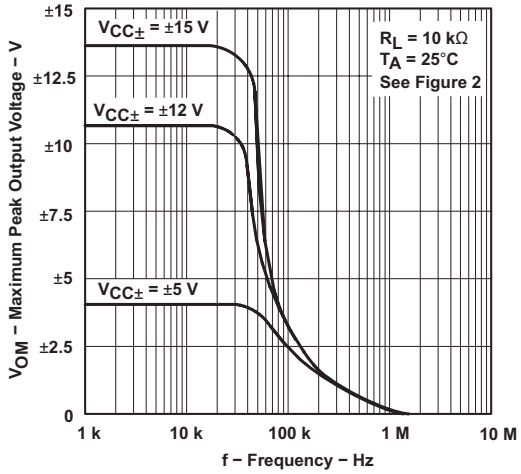

Figure 4. Maximum Peak Output Voltage vs Frequency

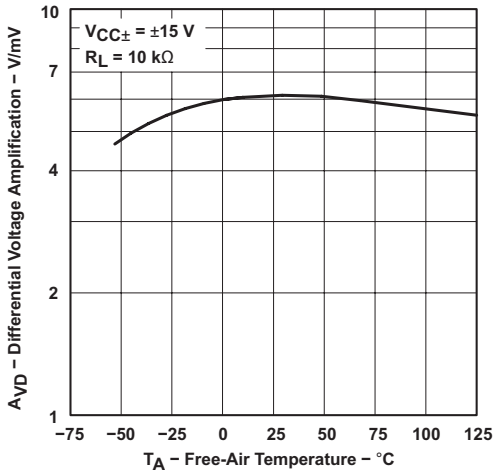

Figure 5. Differential Voltage Amplification vs Free-Air Temperature

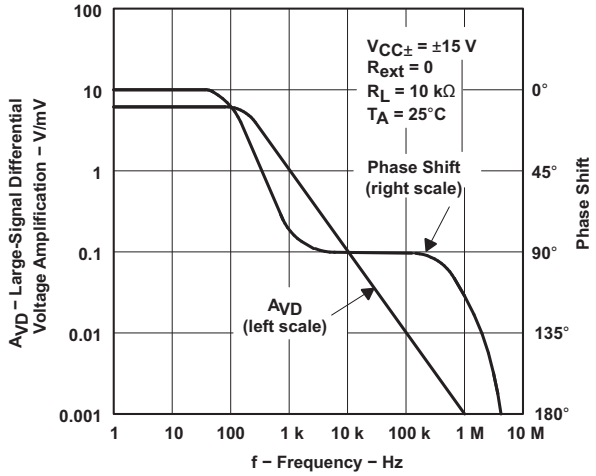

Figure 6. Large-Signal Differential Voltage Amplification and Phase Shift vs Frequency

Copyright © 1978–2015, Texas Instruments Incorporated

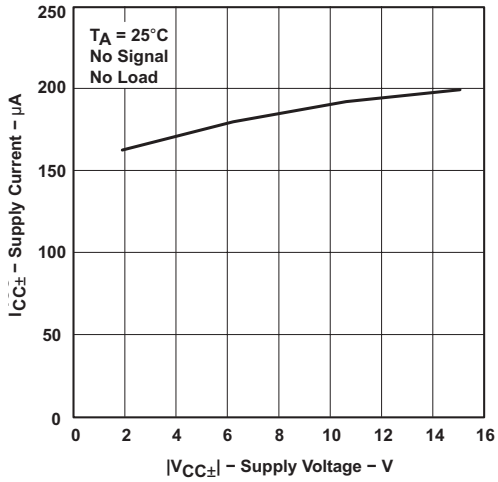

Figure 7. Supply Current vs Supply Voltage

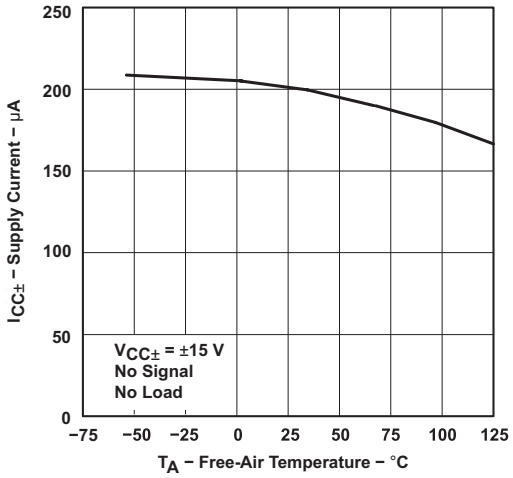

Figure 8. Supply Current vs Free-Air Temperature

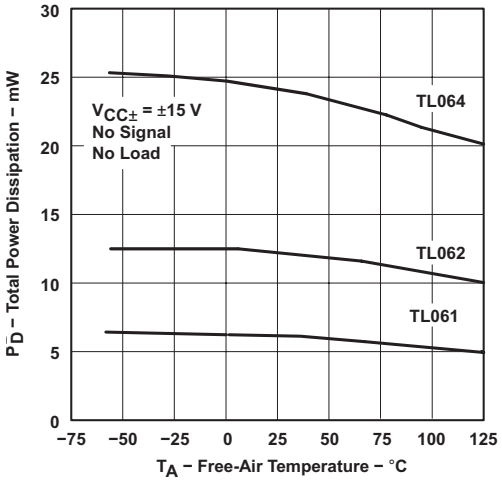

Figure 9. Total Power Dissipation vs Free-Air Temperature

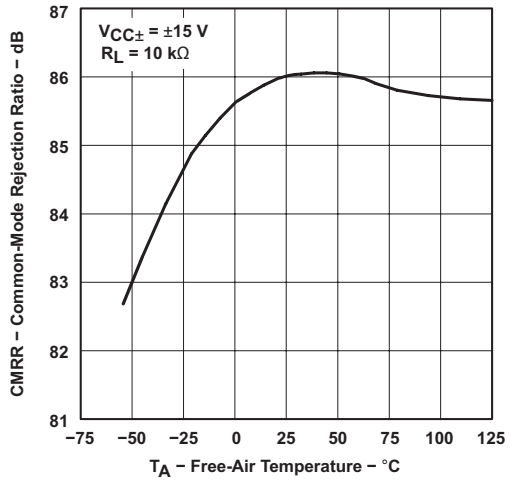

Figure 10. All Except TL06_C Common-Mode Rejection Ratio vs Free-Air Temperature

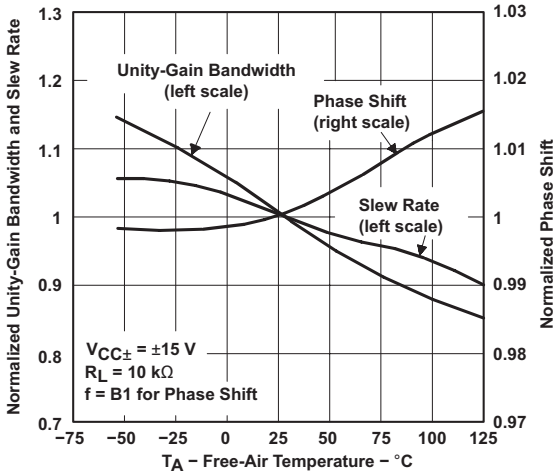

Figure 11. Normalized Unity-Gain Bandwidth, Slew Rate, and Phase Shift vs Free-Air Temperature

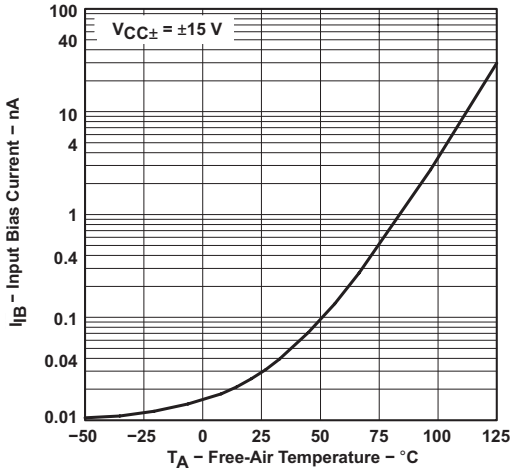

Figure 12. Input Bias Current vs Free-Air Temperature

Copyright © 1978–2015, Texas Instruments Incorporated

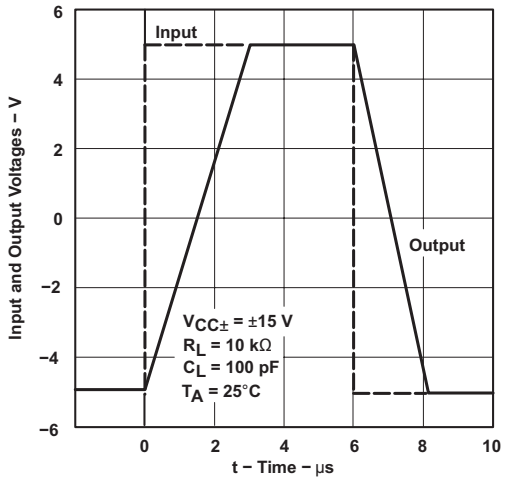

Figure 13. Voltage-Follower Large-Signal Pulse Response vs Time

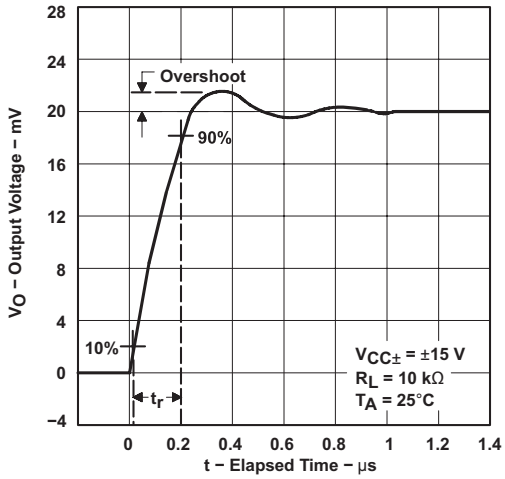

Figure 14. Output Voltage vs Elapsed Time

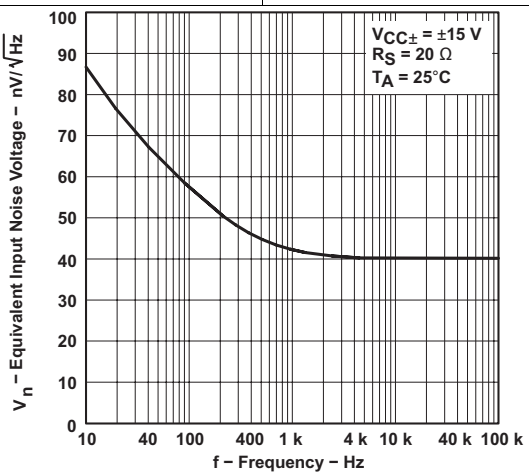

Figure 15. Equivalent Input Noise Voltage vs Frequency

Copyright © 1978–2015, Texas Instruments Incorporated

7 Parameter Measurement Information

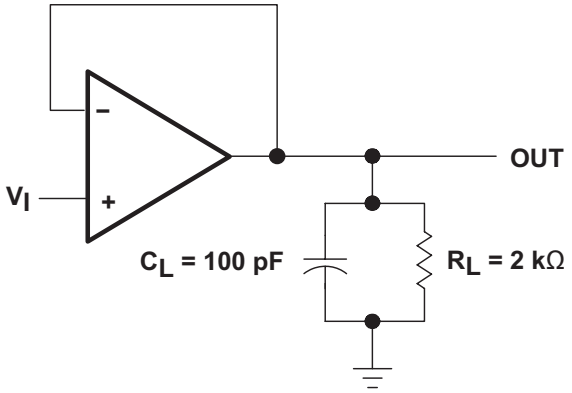

Figure 16. Unity-Gain Amplifier

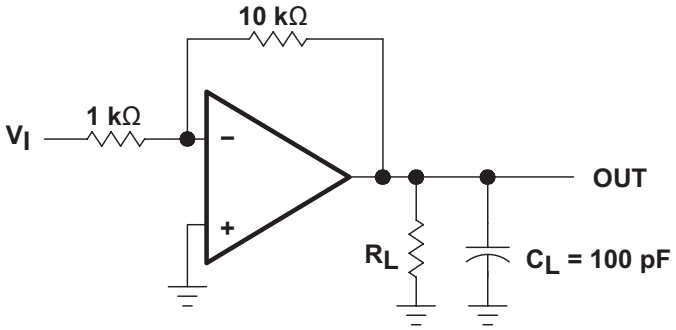

Figure 17. Gain-of-10 Inverting Amplifier

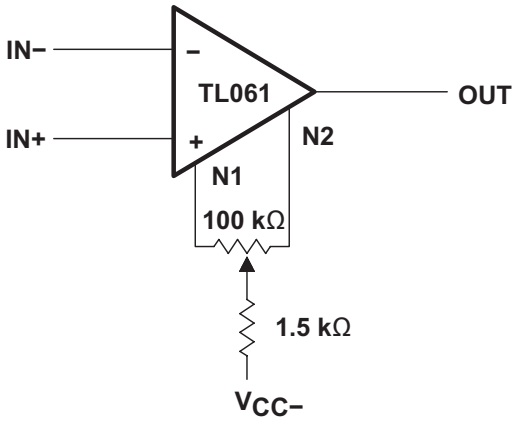

Figure 18. Input Offset-Voltage Null Circuit

8 Detailed Description

8.1 Overview

The JFET-input operational amplifiers of the TL06x series are designed as low-power versions of the TL08x series amplifiers. They feature high input impedance, wide bandwidth, high slew rate, and low input offset and input bias currents. The TL06x series features the same terminal assignments as the TL07x and TL08x series. Each of these JFET-input operational amplifiers incorporates well-matched, high-voltage JFET and bipolar transistors in an integrated circuit.

The C-suffix devices are characterized for operation from 0°C to 70°C. The I-suffix devices are characterized for operation from −40°C to 85°C, and the M-suffix devices are characterized for operation over the full military temperature range of −55°C to 125°C.

8.2 Functional Block Diagram

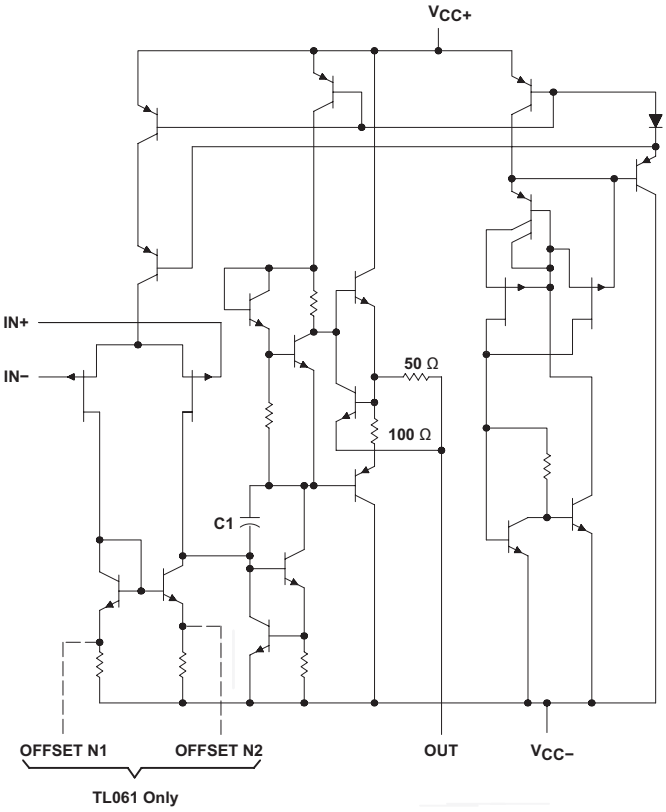

C1 = 10 pF on TL061, TL062, and TL064
Component values shown are nominal.

8.3 Feature Description

8.3.1 Common-Mode Rejection Ratio

The common-mode rejection ratio (CMRR) of an amplifier is a measure of how well the device rejects unwanted input signals common to both input leads. It is found by taking the ratio of the change in input offset voltage to the change in the input voltage and converting to decibels. Ideally the CMRR is infinite, but in practice, amplifiers are designed to have it as high as possible. The CMRR of this device is 86 dB.

8.3.2 Slew Rate

The slew rate is the rate at which an operational amplifier can change its output when there is a change on the input. These devices have a 3.5-V/μs slew rate.

Copyright © 1978–2015, Texas Instruments Incorporated

8.4 Device Functional Modes

These devices are powered on when the supply is connected. This device can be operated as a single supply operational amplifier or dual supply amplifier depending on the application.

9 Applications and Implementation

NOTE

Information in the following applications sections is not part of the TI component specification, and TI does not warrant its accuracy or completeness. TI's customers are responsible for determining suitability of components for their purposes. Customers should validate and test their design implementation to confirm system functionality.

9.1 Application Information

The TL06x series of operational amplifiers can be used in countless applications. The few applications in this section show principles used in all applications of these parts.

9.2 Typical Applications

9.2.1 Inverting Amplifier Application

A typical application for an operational amplifier in an inverting amplifier. This amplifier takes a positive voltage on the input, and makes it a negative voltage of the same magnitude. In the same manner, it also makes negative voltages positive.

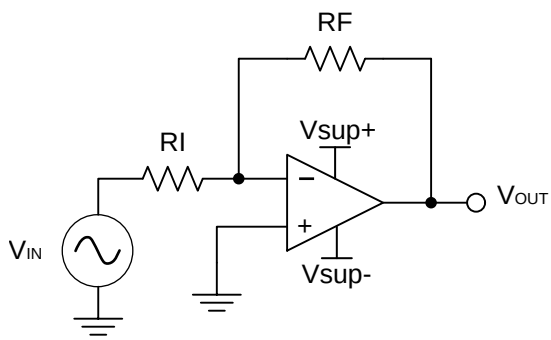

Figure 19. Schematic for Inverting Amplifier Application

9.2.1.1 Design Requirements

The supply voltage must be chosen such that it is larger than the input voltage range and output range. For instance, this application will scale a signal of ±0.5 V to ±1.8 V. Setting the supply at ±12 V is sufficient to accommodate this application.

9.2.1.2 Detailed Design Procedure

Determine the gain required by the inverting amplifier:

$$A_v = \frac{VOUT}{VIN} \tag{1}$$

$$A_v = \frac{1.8}{-0.5} = -3.6 \tag{2}$$

Once the desired gain is determined, choose a value for RI or RF. Choosing a value in the kilohm range is desirable because the amplifier circuit will use currents in the milliamp range. This ensures the part will not draw too much current. This example will choose 10 kΩ for RI which means 36 kΩ will be used for RF. This was determined by Equation 3.

$$A_v = -\frac{RF}{RI} \tag{3}$$

Copyright © 1978–2015, Texas Instruments Incorporated

Typical Applications (continued)

9.2.1.3 Application Curve

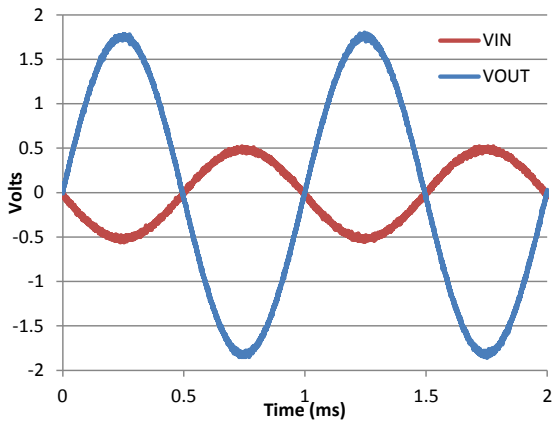

Figure 20. Input and Output Voltages of the Inverting Amplifier

9.3 System Examples

9.3.1 General Applications

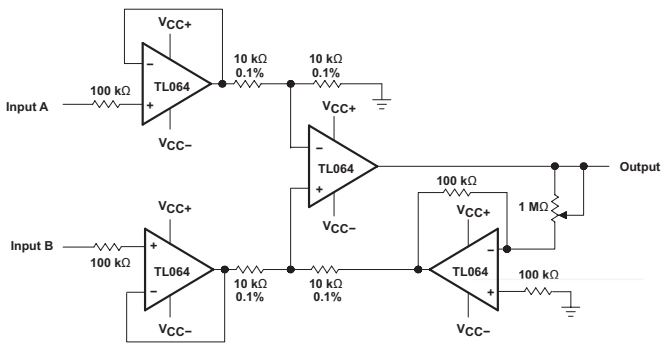

Figure 21. Instrumentation Amplifier

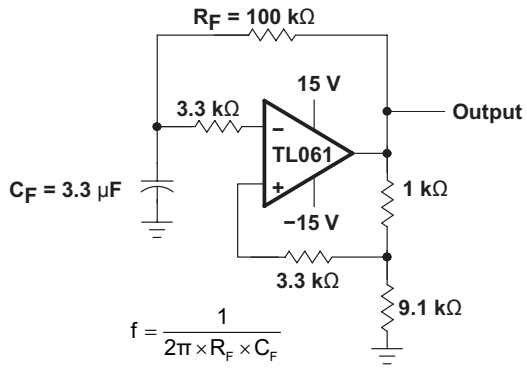

Figure 22. 0.5-Hz Square-Wave Oscillator

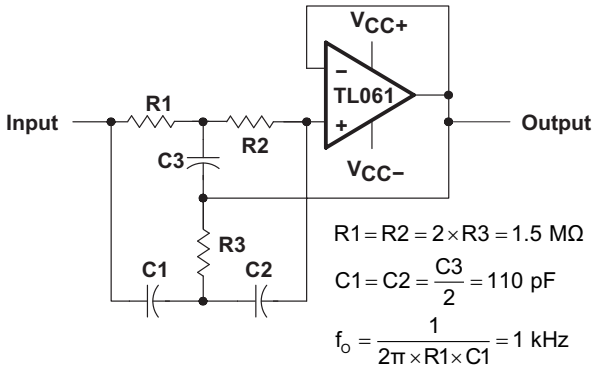

Figure 23. High-Q Notch Filter

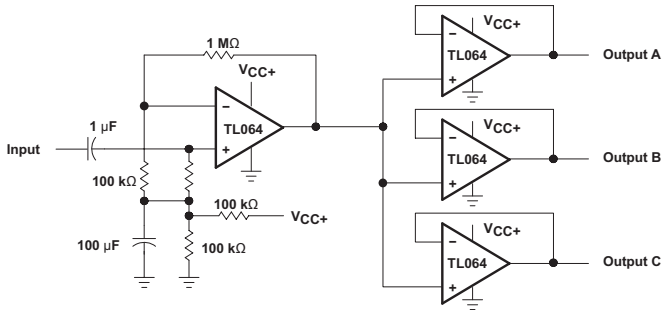

Figure 24. Audio-Distribution Amplifier

System Examples (continued)

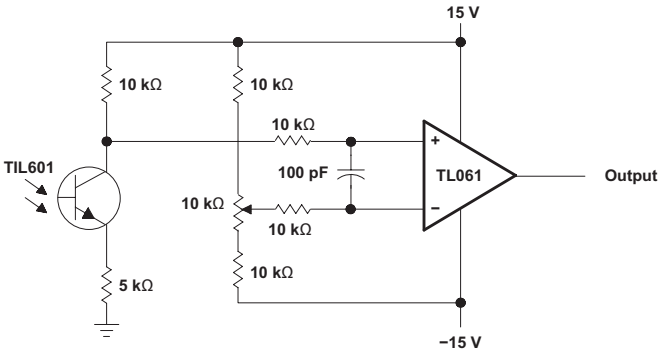

Figure 25. Low-Level Light Detector Preamplifier

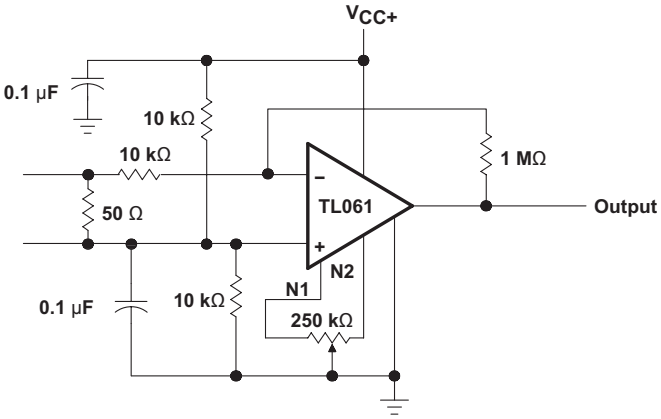

Figure 26. AC Amplifier

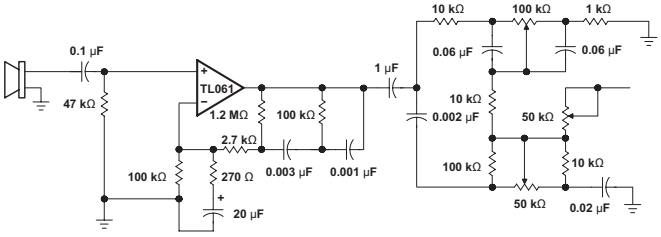

Figure 27. Microphone Preamplifier With Tone Control

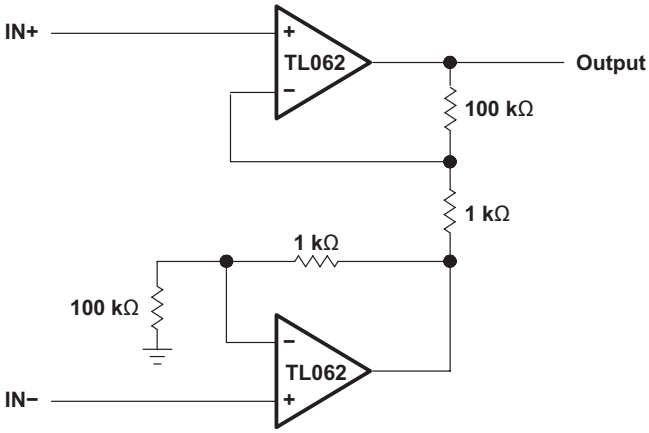

Figure 28. Instrumentation Amplifier

Copyright © 1978–2015, Texas Instruments Incorporated

System Examples (continued)

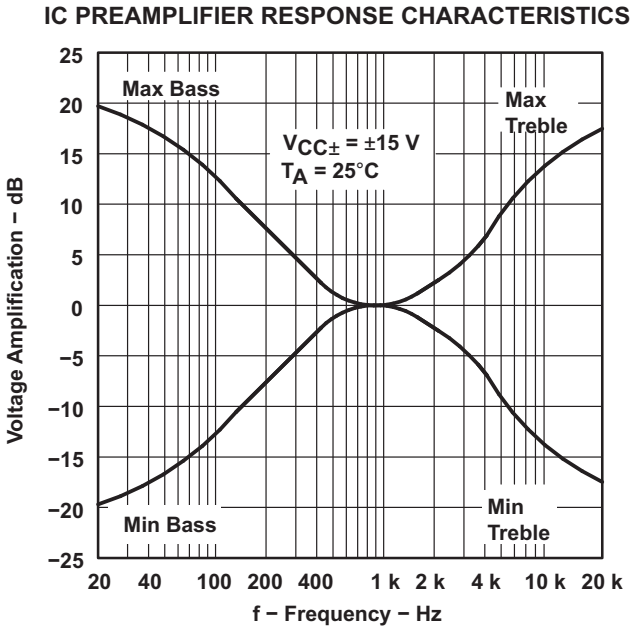

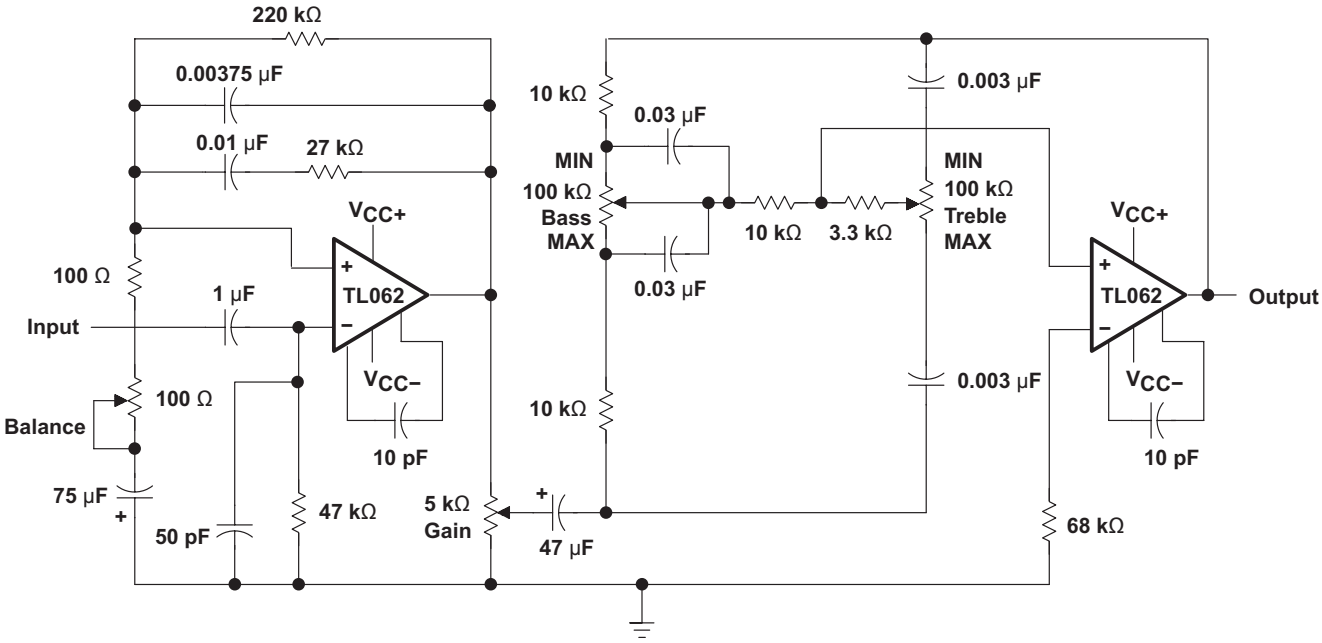

Figure 29. IC Preamplifier

10 Power Supply Recommendations

CAUTION

Supply voltages larger than 36 V for a single supply, or outside the range of ±18 V for a dual supply can permanently damage the device (see the *Absolute Maximum Ratings*).

Place 0.1-µF bypass capacitors close to the power-supply pins to reduce errors coupling in from noisy or high impedance power supplies. For more detailed information on bypass capacitor placement, refer to the *Layout*.

11 Layout

11.1 Layout Guidelines

For best operational performance of the device, use good PCB layout practices, including:

- Noise can propagate into analog circuitry through the power pins of the circuit as a whole, as well as the operational amplifier. Bypass capacitors are used to reduce the coupled noise by providing low impedance power sources local to the analog circuitry.
  - Connect low-ESR, 0.1-µF ceramic bypass capacitors between each supply pin and ground, placed as close to the device as possible. A single bypass capacitor from V+ to ground is applicable for single supply applications.
- Separate grounding for analog and digital portions of circuitry is one of the simplest and most-effective methods of noise suppression. One or more layers on multilayer PCBs are usually devoted to ground planes. A ground plane helps distribute heat and reduces EMI noise pickup. Make sure to physically separate digital and analog grounds, paying attention to the flow of the ground current. For more detailed information, refer to *Circuit Board Layout Techniques*, (SLOA089).
- To reduce parasitic coupling, run the input traces as far away from the supply or output traces as possible. If it is not possible to keep them separate, it is much better to cross the sensitive trace perpendicular as opposed to in parallel with the noisy trace.
- Place the external components as close to the device as possible. Keeping RF and RG close to the inverting input minimizes parasitic capacitance, as shown in *Layout Examples*.
- Keep the length of input traces as short as possible. Always remember that the input traces are the most sensitive part of the circuit.
- Consider a driven, low-impedance guard ring around the critical traces. A guard ring can significantly reduce leakage currents from nearby traces that are at different potentials.

11.2 Layout Examples

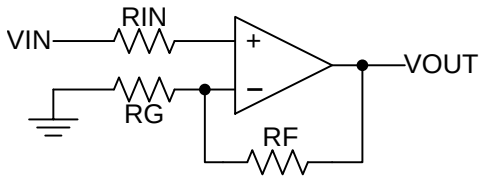

Figure 30. Operational Amplifier Schematic for Noninverting Configuration

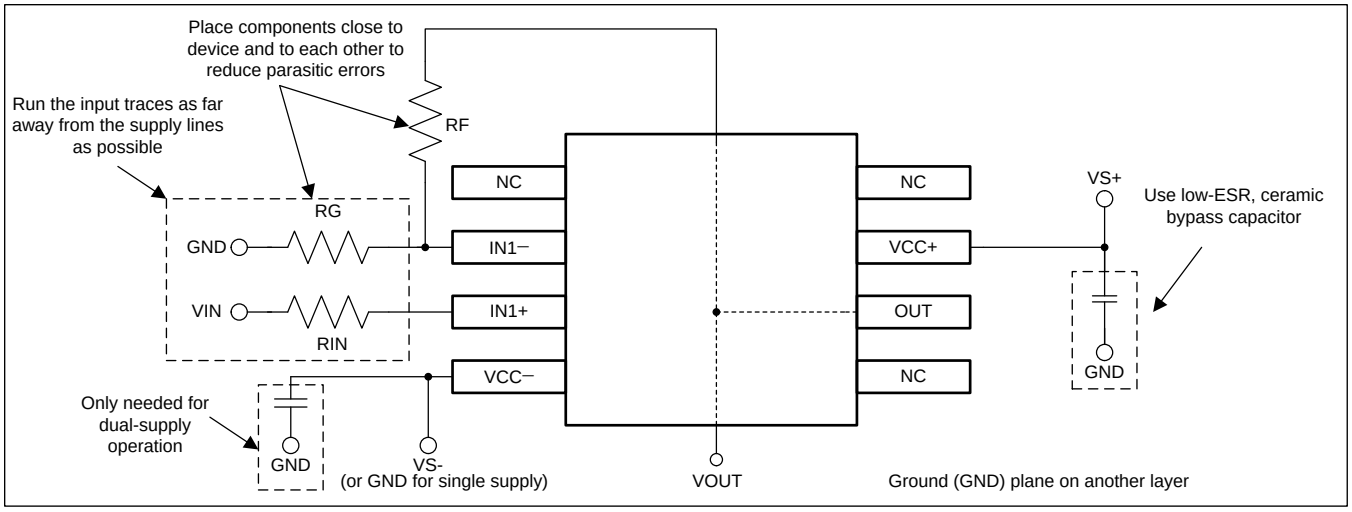

Figure 31. Operational Amplifier Board Layout for Noninverting Configuration

Copyright © 1978–2015, Texas Instruments Incorporated

12 Device and Documentation Support

12.1 Documentation Support

12.1.1 Related Documentation

For related documentation, see the following:

Circuit Board Layout Techniques, SLOA089

12.2 Related Links

The table below lists quick access links. Categories include technical documents, support and community resources, tools and software, and quick access to sample or buy.

Table 2. Related Links

PARTS	PRODUCT FOLDER	SAMPLE & BUY	TECHNICAL DOCUMENTS	TOOLS & SOFTWARE	SUPPORT & COMMUNITY
TL061	Click here	Click here	Click here	Click here	Click here
TL061A	Click here	Click here	Click here	Click here	Click here
TL061B	Click here	Click here	Click here	Click here	Click here
TL062	Click here	Click here	Click here	Click here	Click here
TL062A	Click here	Click here	Click here	Click here	Click here
TL062B	Click here	Click here	Click here	Click here	Click here
TL064	Click here	Click here	Click here	Click here	Click here
TL064A	Click here	Click here	Click here	Click here	Click here
TL064B	Click here	Click here	Click here	Click here	Click here

12.3 Community Resources

The following links connect to TI community resources. Linked contents are provided "AS IS" by the respective contributors. They do not constitute TI specifications and do not necessarily reflect TI's views; see TI's Terms of Use.

TI E2E™ Online Community ***TI's Engineer-to-Engineer (E2E) Community.*** Created to foster collaboration among engineers. At e2e.ti.com, you can ask questions, share knowledge, explore ideas and help solve problems with fellow engineers.

Design Support ***TI's Design Support*** Quickly find helpful E2E forums along with design support tools and contact information for technical support.

12.4 Trademarks

E2E is a trademark of Texas Instruments.

12.5 Electrostatic Discharge Caution

These devices have limited built-in ESD protection. The leads should be shorted together or the device placed in conductive foam during storage or handling to prevent electrostatic damage to the MOS gates.

12.6 Glossary

SLYZ022 — *TI Glossary*.

This glossary lists and explains terms, acronyms, and definitions.

13 Mechanical, Packaging, and Orderable Information

The following pages include mechanical packaging and orderable information. This information is the most current data available for the designated devices. This data is subject to change without notice and revision of this document. For browser based versions of this data sheet, refer to the left hand navigation.

PACKAGING INFORMATION

Orderable Device	Status (1)	Package Type	Package Drawing	Pins	Package Qty	Eco Plan (2)	Lead finish/ Ball material (6)	MSL Peak Temp (3)	Op Temp (°C)	Device Marking (4/5)	Samples
81023022A	ACTIVE	LCCC	FK	20	1	Non-RoHS & Non-Green	POST-PLATE	N / A for Pkg Type	-55 to 125	81023022A TL062MFKB	Samples
8102302PA	ACTIVE	CDIP	JG	8	1	Non-RoHS & Non-Green	SNPB	N / A for Pkg Type	-55 to 125	8102302PA TL062M	Samples
81023032A	ACTIVE	LCCC	FK	20	1	Non-RoHS & Non-Green	POST-PLATE	N / A for Pkg Type	-55 to 125	81023032A TL064MFKB	Samples
8102303CA	ACTIVE	CDIP	J	14	1	Non-RoHS & Non-Green	SNPB	N / A for Pkg Type	-55 to 125	8102303CA TL064MJB	Samples
8102303DA	ACTIVE	CFP	W	14	1	Non-RoHS & Non-Green	SNPB	N / A for Pkg Type	-55 to 125	8102303DA TL064MWB	Samples
TL061ACD	ACTIVE	SOIC	D	8	75	RoHS & Green	NIPDAU	Level-1-260C-UNLIM	0 to 70	061AC	Samples
TL061ACDE4	ACTIVE	SOIC	D	8	75	RoHS & Green	NIPDAU	Level-1-260C-UNLIM	0 to 70	061AC	Samples
TL061ACDR	ACTIVE	SOIC	D	8	2500	RoHS & Green	NIPDAU	Level-1-260C-UNLIM	0 to 70	061AC	Samples
TL061ACP	ACTIVE	PDIP	P	8	50	RoHS & Green	NIPDAU	N / A for Pkg Type	0 to 70	TL061ACP	Samples
TL061BCP	ACTIVE	PDIP	P	8	50	RoHS & Green	NIPDAU	N / A for Pkg Type	0 to 70	TL061BCP	Samples
TL061BCPE4	ACTIVE	PDIP	P	8	50	RoHS & Green	NIPDAU	N / A for Pkg Type	0 to 70	TL061BCP	Samples
TL061CD	ACTIVE	SOIC	D	8	75	RoHS & Green	NIPDAU	Level-1-260C-UNLIM	0 to 70	TL061C	Samples
TL061CDR	ACTIVE	SOIC	D	8	2500	RoHS & Green	NIPDAU	Level-1-260C-UNLIM	0 to 70	TL061C	Samples
TL061CP	ACTIVE	PDIP	P	8	50	RoHS & Green	NIPDAU	N / A for Pkg Type	0 to 70	TL061CP	Samples
TL061CPSR	ACTIVE	SO	PS	8	2000	RoHS & Green	NIPDAU	Level-1-260C-UNLIM	0 to 70	T061	Samples
TL061ID	ACTIVE	SOIC	D	8	75	RoHS & Green	NIPDAU	Level-1-260C-UNLIM	-40 to 85	TL061I	Samples
TL061IDR	ACTIVE	SOIC	D	8	2500	RoHS & Green	NIPDAU	Level-1-260C-UNLIM	-40 to 85	TL061I	Samples
TL061IDRG4	ACTIVE	SOIC	D	8	2500	RoHS & Green	NIPDAU	Level-1-260C-UNLIM	-40 to 85	TL061I	Samples
TL061IP	ACTIVE	PDIP	P	8	50	RoHS & Green	NIPDAU	N / A for Pkg Type	-40 to 85	TL061IP	Samples

Orderable Device	Status (1)	Package Type	Package Drawing	Pins	Package Qty	Eco Plan (2)	Lead finish/ Ball material (6)	MSL Peak Temp (3)	Op Temp (°C)	Device Marking (4/5)	Samples
TL061IPE4	ACTIVE	PDIP	P	8	50	RoHS & Green	NIPDAU	N / A for Pkg Type	-40 to 85	TL061IP	Samples
TL062ACD	ACTIVE	SOIC	D	8	75	RoHS & Green	NIPDAU	Level-1-260C-UNLIM	0 to 70	062AC	Samples
TL062ACDE4	ACTIVE	SOIC	D	8	75	RoHS & Green	NIPDAU	Level-1-260C-UNLIM	0 to 70	062AC	Samples
TL062ACDR	ACTIVE	SOIC	D	8	2500	RoHS & Green	NIPDAU	Level-1-260C-UNLIM	0 to 70	062AC	Samples
TL062ACDRE4	ACTIVE	SOIC	D	8	2500	RoHS & Green	NIPDAU	Level-1-260C-UNLIM	0 to 70	062AC	Samples
TL062ACDRG4	ACTIVE	SOIC	D	8	2500	RoHS & Green	NIPDAU	Level-1-260C-UNLIM	0 to 70	062AC	Samples
TL062ACP	ACTIVE	PDIP	P	8	50	RoHS & Green	NIPDAU	N / A for Pkg Type	0 to 70	TL062ACP	Samples
TL062ACPSR	ACTIVE	SO	PS	8	2000	RoHS & Green	NIPDAU	Level-1-260C-UNLIM	0 to 70	T062A	Samples
TL062ACPSRG4	ACTIVE	SO	PS	8	2000	RoHS & Green	NIPDAU	Level-1-260C-UNLIM	0 to 70	T062A	Samples
TL062BCD	ACTIVE	SOIC	D	8	75	RoHS & Green	NIPDAU	Level-1-260C-UNLIM	0 to 70	062BC	Samples
TL062BCDG4	ACTIVE	SOIC	D	8	75	RoHS & Green	NIPDAU	Level-1-260C-UNLIM	0 to 70	062BC	Samples
TL062BCDR	ACTIVE	SOIC	D	8	2500	RoHS & Green	NIPDAU	Level-1-260C-UNLIM	0 to 70	062BC	Samples
TL062BCP	ACTIVE	PDIP	P	8	50	RoHS & Green	NIPDAU	N / A for Pkg Type	0 to 70	TL062BCP	Samples
TL062BCPE4	ACTIVE	PDIP	P	8	50	RoHS & Green	NIPDAU	N / A for Pkg Type	0 to 70	TL062BCP	Samples
TL062CD	ACTIVE	SOIC	D	8	75	RoHS & Green	NIPDAU	Level-1-260C-UNLIM	0 to 70	TL062C	Samples
TL062CDE4	ACTIVE	SOIC	D	8	75	RoHS & Green	NIPDAU	Level-1-260C-UNLIM	0 to 70	TL062C	Samples
TL062CDR	ACTIVE	SOIC	D	8	2500	RoHS & Green	NIPDAU	Level-1-260C-UNLIM	0 to 70	TL062C	Samples
TL062CDRE4	ACTIVE	SOIC	D	8	2500	RoHS & Green	NIPDAU	Level-1-260C-UNLIM	0 to 70	TL062C	Samples
TL062CDRG4	ACTIVE	SOIC	D	8	2500	RoHS & Green	NIPDAU	Level-1-260C-UNLIM	0 to 70	TL062C	Samples
TL062CP	ACTIVE	PDIP	P	8	50	RoHS & Green	NIPDAU	N / A for Pkg Type	0 to 70	TL062CP	Samples
TL062CPE4	ACTIVE	PDIP	P	8	50	RoHS & Green	NIPDAU	N / A for Pkg Type	0 to 70	TL062CP	Samples

Orderable Device	Status (1)	Package Type	Package Drawing	Pins	Package Qty	Eco Plan (2)	Lead finish/ Ball material (6)	MSL Peak Temp (3)	Op Temp (°C)	Device Marking (4/5)	Samples
TL062CPS	OBSOLETE	SO	PS	8		RoHS & Green	NIPDAU	Level-1-260C-UNLIM	0 to 70	T062	
TL062CPSR	ACTIVE	SO	PS	8	2000	RoHS & Green	NIPDAU	Level-1-260C-UNLIM	0 to 70	T062	Samples
TL062CPW	ACTIVE	TSSOP	PW	8	150	RoHS & Green	NIPDAU	Level-1-260C-UNLIM	0 to 70	T062	Samples
TL062CPWG4	ACTIVE	TSSOP	PW	8	150	RoHS & Green	NIPDAU	Level-1-260C-UNLIM	0 to 70	T062	Samples
TL062CPWR	ACTIVE	TSSOP	PW	8	2000	RoHS & Green	NIPDAU	Level-1-260C-UNLIM	0 to 70	T062	Samples
TL062CPWRG4	ACTIVE	TSSOP	PW	8	2000	RoHS & Green	NIPDAU	Level-1-260C-UNLIM	0 to 70	T062	Samples
TL062ID	ACTIVE	SOIC	D	8	75	RoHS & Green	NIPDAU	Level-1-260C-UNLIM	-40 to 85	TL062I	Samples
TL062IDG4	ACTIVE	SOIC	D	8	75	RoHS & Green	NIPDAU	Level-1-260C-UNLIM	-40 to 85	TL062I	Samples
TL062IDR	ACTIVE	SOIC	D	8	2500	RoHS & Green	NIPDAU	Level-1-260C-UNLIM	-40 to 85	TL062I	Samples
TL062IDRG4	ACTIVE	SOIC	D	8	2500	RoHS & Green	NIPDAU	Level-1-260C-UNLIM	-40 to 85	TL062I	Samples
TL062IP	ACTIVE	PDIP	P	8	50	RoHS & Green	NIPDAU	N / A for Pkg Type	-40 to 85	TL062IP	Samples
TL062IPE4	ACTIVE	PDIP	P	8	50	RoHS & Green	NIPDAU	N / A for Pkg Type	-40 to 85	TL062IP	Samples
TL062IPWR	ACTIVE	TSSOP	PW	8	2000	RoHS & Green	NIPDAU	Level-1-260C-UNLIM	-40 to 85	Z062	Samples
TL062IPWRG4	ACTIVE	TSSOP	PW	8	2000	RoHS & Green	NIPDAU	Level-1-260C-UNLIM	-40 to 85	Z062	Samples
TL062MFKB	ACTIVE	LCCC	FK	20	1	Non-RoHS & Non-Green	POST-PLATE	N / A for Pkg Type	-55 to 125	81023022A TL062MFKB	Samples
TL062MJG	ACTIVE	CDIP	JG	8	1	Non-RoHS & Non-Green	SNPB	N / A for Pkg Type	-55 to 125	TL062MJG	Samples
TL062MJGB	ACTIVE	CDIP	JG	8	1	Non-RoHS & Non-Green	SNPB	N / A for Pkg Type	-55 to 125	8102302PA TL062M	Samples
TL064ACD	ACTIVE	SOIC	D	14	50	RoHS & Green	NIPDAU	Level-1-260C-UNLIM	0 to 70	TL064AC	Samples
TL064ACDR	ACTIVE	SOIC	D	14	2500	RoHS & Green	NIPDAU	Level-1-260C-UNLIM	0 to 70	TL064AC	Samples
TL064ACDRE4	ACTIVE	SOIC	D	14	2500	RoHS & Green	NIPDAU	Level-1-260C-UNLIM	0 to 70	TL064AC	Samples
TL064ACN	ACTIVE	PDIP	N	14	25	RoHS & Green	NIPDAU	N / A for Pkg Type	0 to 70	TL064ACN	Samples

Orderable Device	Status (1)	Package Type	Package Drawing	Pins	Package Qty	Eco Plan (2)	Lead finish/ Ball material (6)	MSL Peak Temp (3)	Op Temp (°C)	Device Marking (4/5)	Samples
TL064BCD	ACTIVE	SOIC	D	14	50	RoHS & Green	NIPDAU	Level-1-260C-UNLIM	0 to 70	TL064BC	Samples
TL064BCDG4	ACTIVE	SOIC	D	14	50	RoHS & Green	NIPDAU	Level-1-260C-UNLIM	0 to 70	TL064BC	Samples
TL064BCDR	ACTIVE	SOIC	D	14	2500	RoHS & Green	NIPDAU	Level-1-260C-UNLIM	0 to 70	TL064BC	Samples
TL064BCN	ACTIVE	PDIP	N	14	25	RoHS & Green	NIPDAU	N / A for Pkg Type	0 to 70	TL064BCN	Samples
TL064BCNE4	ACTIVE	PDIP	N	14	25	RoHS & Green	NIPDAU	N / A for Pkg Type	0 to 70	TL064BCN	Samples
TL064CD	ACTIVE	SOIC	D	14	50	RoHS & Green	NIPDAU	Level-1-260C-UNLIM	0 to 70	TL064C	Samples
TL064CDE4	ACTIVE	SOIC	D	14	50	RoHS & Green	NIPDAU	Level-1-260C-UNLIM	0 to 70	TL064C	Samples
TL064CDR	ACTIVE	SOIC	D	14	2500	RoHS & Green	NIPDAU	Level-1-260C-UNLIM	0 to 70	TL064C	Samples
TL064CDRE4	ACTIVE	SOIC	D	14	2500	RoHS & Green	NIPDAU	Level-1-260C-UNLIM	0 to 70	TL064C	Samples
TL064CN	ACTIVE	PDIP	N	14	25	RoHS & Green	NIPDAU	N / A for Pkg Type	0 to 70	TL064CN	Samples
TL064CNSR	ACTIVE	SO	NS	14	2000	RoHS & Green	NIPDAU	Level-1-260C-UNLIM	0 to 70	TL064	Samples
TL064CPW	ACTIVE	TSSOP	PW	14	90	RoHS & Green	NIPDAU	Level-1-260C-UNLIM	0 to 70	T064	Samples
TL064CPWE4	ACTIVE	TSSOP	PW	14	90	RoHS & Green	NIPDAU	Level-1-260C-UNLIM	0 to 70	T064	Samples
TL064CPWG4	ACTIVE	TSSOP	PW	14	90	RoHS & Green	NIPDAU	Level-1-260C-UNLIM	0 to 70	T064	Samples
TL064CPWR	ACTIVE	TSSOP	PW	14	2000	RoHS & Green	NIPDAU	Level-1-260C-UNLIM	0 to 70	T064	Samples
TL064ID	ACTIVE	SOIC	D	14	50	RoHS & Green	NIPDAU	Level-1-260C-UNLIM	-40 to 85	TL064I	Samples
TL064IDG4	ACTIVE	SOIC	D	14	50	RoHS & Green	NIPDAU	Level-1-260C-UNLIM	-40 to 85	TL064I	Samples
TL064IDR	ACTIVE	SOIC	D	14	2500	RoHS & Green	NIPDAU | SN	Level-1-260C-UNLIM	-40 to 85	TL064I	Samples
TL064IDRG4	ACTIVE	SOIC	D	14	2500	RoHS & Green	NIPDAU	Level-1-260C-UNLIM	-40 to 85	TL064I	Samples
TL064IN	ACTIVE	PDIP	N	14	25	RoHS & Green	NIPDAU	N / A for Pkg Type	-40 to 85	TL064IN	Samples
TL064INE4	ACTIVE	PDIP	N	14	25	RoHS & Green	NIPDAU	N / A for Pkg Type	-40 to 85	TL064IN	Samples

Orderable Device	Status (1)	Package Type	Package Drawing	Pins	Package Qty	Eco Plan (2)	Lead finish/ Ball material (6)	MSL Peak Temp (3)	Op Temp (°C)	Device Marking (4/5)	Samples
TL064INS	ACTIVE	SO	NS	14	50	RoHS & Green	NIPDAU	Level-1-260C-UNLIM	-40 to 85	TL064I	Samples
TL064INSR	ACTIVE	SO	NS	14	2000	RoHS & Green	NIPDAU	Level-1-260C-UNLIM	-40 to 85	TL064I	Samples
TL064IPWR	ACTIVE	TSSOP	PW	14	2000	RoHS & Green	NIPDAU	Level-1-260C-UNLIM	-40 to 85	Z064	Samples
TL064MFKB	ACTIVE	LCCC	FK	20	1	Non-RoHS & Non-Green	POST-PLATE	N / A for Pkg Type	-55 to 125	81023032A TL064MFKB	Samples
TL064MJ	ACTIVE	CDIP	J	14	1	Non-RoHS & Non-Green	SNPB	N / A for Pkg Type	-55 to 125	TL064MJ	Samples
TL064MJB	ACTIVE	CDIP	J	14	1	Non-RoHS & Non-Green	SNPB	N / A for Pkg Type	-55 to 125	8102303CA TL064MJB	Samples
TL064MWB	ACTIVE	CFP	W	14	1	Non-RoHS & Non-Green	SNPB	N / A for Pkg Type	-55 to 125	8102303DA TL064MWB	Samples

(1) The marketing status values are defined as follows:
ACTIVE: Product device recommended for new designs.
LIFEBUY: TI has announced that the device will be discontinued, and a lifetime-buy period is in effect.
NRND: Not recommended for new designs. Device is in production to support existing customers, but TI does not recommend using this part in a new design.
PREVIEW: Device has been announced but is not in production. Samples may or may not be available.
OBSOLETE: TI has discontinued the production of the device.

(2) **RoHS:** TI defines "RoHS" to mean semiconductor products that are compliant with the current EU RoHS requirements for all 10 RoHS substances, including the requirement that RoHS substance do not exceed 0.1% by weight in homogeneous materials. Where designed to be soldered at high temperatures, "RoHS" products are suitable for use in specified lead-free processes. TI may reference these types of products as "Pb-Free".
RoHS Exempt: TI defines "RoHS Exempt" to mean products that contain lead but are compliant with EU RoHS pursuant to a specific EU RoHS exemption.
Green: TI defines "Green" to mean the content of Chlorine (Cl) and Bromine (Br) based flame retardants meet JS709B low halogen requirements of <=1000ppm threshold. Antimony trioxide based flame retardants must also meet the <=1000ppm threshold requirement.

(3) MSL, Peak Temp. - The Moisture Sensitivity Level rating according to the JEDEC industry standard classifications, and peak solder temperature.

(4) There may be additional marking, which relates to the logo, the lot trace code information, or the environmental category on the device.

(5) Multiple Device Markings will be inside parentheses. Only one Device Marking contained in parentheses and separated by a "~" will appear on a device. If a line is indented then it is a continuation of the previous line and the two combined represent the entire Device Marking for that device.

(6) Lead finish/Ball material - Orderable Devices may have multiple material finish options. Finish options are separated by a vertical ruled line. Lead finish/Ball material values may wrap to two lines if the finish value exceeds the maximum column width.

Important Information and Disclaimer: The information provided on this page represents TI's knowledge and belief as of the date that it is provided. TI bases its knowledge and belief on information provided by third parties, and makes no representation or warranty as to the accuracy of such information. Efforts are underway to better integrate information from third parties. TI has taken and continues to take reasonable steps to provide representative and accurate information but may not have conducted destructive testing or chemical analysis on incoming materials and chemicals. TI and TI suppliers consider certain information to be proprietary, and thus CAS numbers and other limited information may not be available for release.

In no event shall TI's liability arising out of such information exceed the total purchase price of the TI part(s) at issue in this document sold by TI to Customer on an annual basis.

OTHER QUALIFIED VERSIONS OF TL062, TL062M, TL064, TL064M :

- Catalog: TL062, TL064
- Military: TL062M, TL064M

NOTE: Qualified Version Definitions:

- Catalog - TI's standard catalog product
- Military - QML certified for Military and Defense Applications

TAPE AND REEL INFORMATION

REEL DIMENSIONS

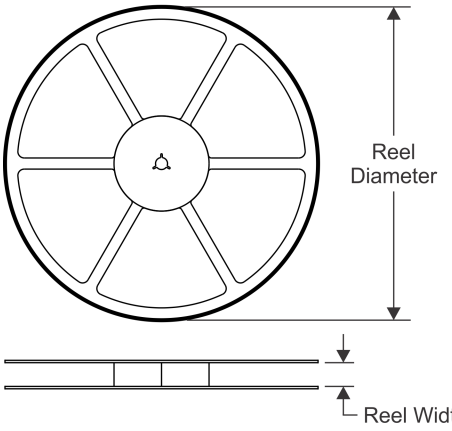

TAPE DIMENSIONS

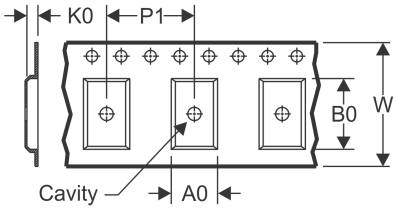

A0	Dimension designed to accommodate the component width
B0	Dimension designed to accommodate the component length
K0	Dimension designed to accommodate the component thickness
W	Overall width of the carrier tape
P1	Pitch between successive cavity centers

QUADRANT ASSIGNMENTS FOR PIN 1 ORIENTATION IN TAPE

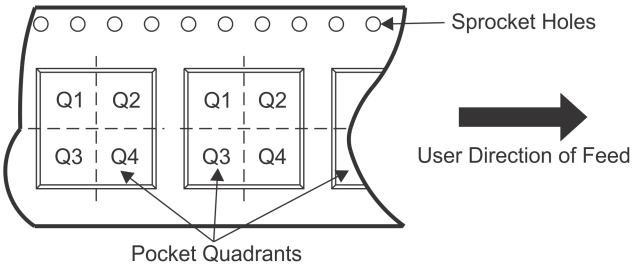

*All dimensions are nominal

Device	Package Type	Package Drawing	Pins	SPQ	Reel Diameter (mm)	Reel Width W1 (mm)	A0 (mm)	B0 (mm)	K0 (mm)	P1 (mm)	W (mm)	Pin1 Quadrant
TL061ACDR	SOIC	D	8	2500	330.0	12.4	6.4	5.2	2.1	8.0	12.0	Q1
TL061CDR	SOIC	D	8	2500	330.0	12.4	6.4	5.2	2.1	8.0	12.0	Q1
TL061CDR	SOIC	D	8	2500	330.0	12.4	6.4	5.2	2.1	8.0	12.0	Q1
TL061IDR	SOIC	D	8	2500	330.0	12.4	6.4	5.2	2.1	8.0	12.0	Q1
TL061IDR	SOIC	D	8	2500	330.0	12.4	6.4	5.2	2.1	8.0	12.0	Q1
TL062ACDR	SOIC	D	8	2500	330.0	12.4	6.4	5.2	2.1	8.0	12.0	Q1
TL062BCDR	SOIC	D	8	2500	330.0	12.4	6.4	5.2	2.1	8.0	12.0	Q1
TL062CDR	SOIC	D	8	2500	330.0	12.4	6.4	5.2	2.1	8.0	12.0	Q1
TL062CDR	SOIC	D	8	2500	330.0	12.4	6.4	5.2	2.1	8.0	12.0	Q1
TL062CPWR	TSSOP	PW	8	2000	330.0	12.4	7.0	3.6	1.6	8.0	12.0	Q1
TL062CPWRG4	TSSOP	PW	8	2000	330.0	12.4	7.0	3.6	1.6	8.0	12.0	Q1
TL062IDR	SOIC	D	8	2500	330.0	12.4	6.4	5.2	2.1	8.0	12.0	Q1
TL062IDR	SOIC	D	8	2500	330.0	12.4	6.4	5.2	2.1	8.0	12.0	Q1
TL062IPWR	TSSOP	PW	8	2000	330.0	12.4	7.0	3.6	1.6	8.0	12.0	Q1
TL064ACDR	SOIC	D	14	2500	330.0	16.4	6.5	9.0	2.1	8.0	16.0	Q1
TL064BCDR	SOIC	D	14	2500	330.0	16.4	6.5	9.0	2.1	8.0	16.0	Q1
TL064CDR	SOIC	D	14	2500	330.0	16.4	6.5	9.0	2.1	8.0	16.0	Q1
TL064CNSR	SO	NS	14	2000	330.0	16.4	8.2	10.5	2.5	12.0	16.0	Q1

Device	Package Type	Package Drawing	Pins	SPQ	Reel Diameter (mm)	Reel Width W1 (mm)	A0 (mm)	B0 (mm)	K0 (mm)	P1 (mm)	W (mm)	Pin1 Quadrant
TL064CPWR	TSSOP	PW	14	2000	330.0	12.4	6.9	5.6	1.6	8.0	12.0	Q1
TL064IDR	SOIC	D	14	2500	330.0	16.4	6.5	9.0	2.1	8.0	16.0	Q1
TL064IDRG4	SOIC	D	14	2500	330.0	16.4	6.5	9.0	2.1	8.0	16.0	Q1
TL064INSR	SO	NS	14	2000	330.0	16.4	8.2	10.5	2.5	12.0	16.0	Q1
TL064IPWR	TSSOP	PW	14	2000	330.0	12.4	6.9	5.6	1.6	8.0	12.0	Q1

TAPE AND REEL BOX DIMENSIONS

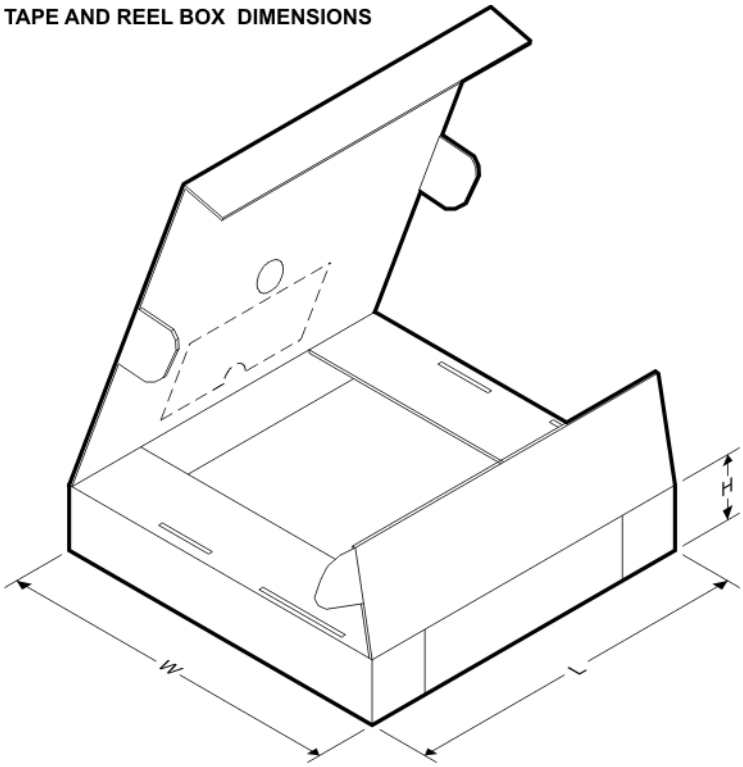

*All dimensions are nominal

Device	Package Type	Package Drawing	Pins	SPQ	Length (mm)	Width (mm)	Height (mm)
TL061ACDR	SOIC	D	8	2500	340.5	338.1	20.6
TL061CDR	SOIC	D	8	2500	853.0	449.0	35.0
TL061CDR	SOIC	D	8	2500	340.5	338.1	20.6
TL061IDR	SOIC	D	8	2500	853.0	449.0	35.0
TL061IDR	SOIC	D	8	2500	340.5	338.1	20.6
TL062ACDR	SOIC	D	8	2500	340.5	338.1	20.6
TL062BCDR	SOIC	D	8	2500	340.5	338.1	20.6
TL062CDR	SOIC	D	8	2500	340.5	338.1	20.6
TL062CDR	SOIC	D	8	2500	853.0	449.0	35.0
TL062CPWR	TSSOP	PW	8	2000	853.0	449.0	35.0
TL062CPWRG4	TSSOP	PW	8	2000	853.0	449.0	35.0
TL062IDR	SOIC	D	8	2500	340.5	338.1	20.6

Device	Package Type	Package Drawing	Pins	SPQ	Length (mm)	Width (mm)	Height (mm)
TL062IDR	SOIC	D	8	2500	853.0	449.0	35.0
TL062IPWR	TSSOP	PW	8	2000	853.0	449.0	35.0
TL064ACDR	SOIC	D	14	2500	853.0	449.0	35.0
TL064BCDR	SOIC	D	14	2500	853.0	449.0	35.0
TL064CDR	SOIC	D	14	2500	853.0	449.0	35.0
TL064CNSR	SO	NS	14	2000	367.0	367.0	38.0
TL064CPWR	TSSOP	PW	14	2000	853.0	449.0	35.0
TL064IDR	SOIC	D	14	2500	853.0	449.0	35.0
TL064IDRG4	SOIC	D	14	2500	853.0	449.0	35.0
TL064INSR	SO	NS	14	2000	853.0	449.0	35.0
TL064IPWR	TSSOP	PW	14	2000	853.0	449.0	35.0

FK (S–CQCC–N**) LEADLESS CERAMIC CHIP CARRIER

28 TERMINAL SHOWN

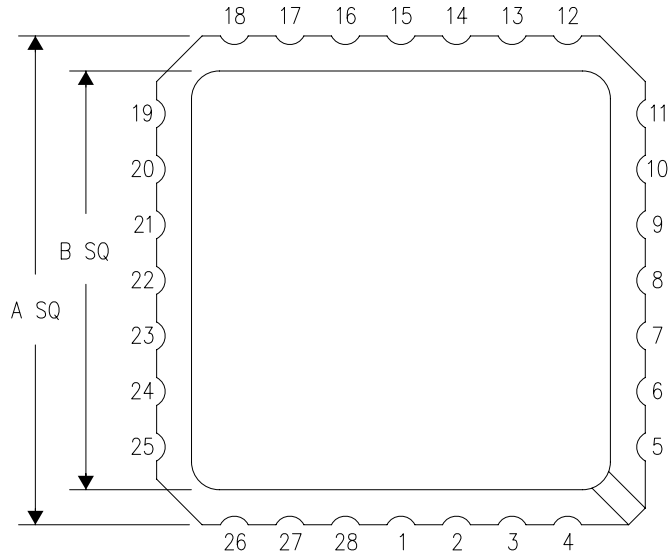

NO. OF TERMINALS **	A		B	
	MIN	MAX	MIN	MAX
20	0.342 (8,69)	0.358 (9,09)	0.307 (7,80)	0.358 (9,09)
28	0.442 (11,23)	0.458 (11,63)	0.406 (10,31)	0.458 (11,63)
44	0.640 (16,26)	0.660 (16,76)	0.495 (12,58)	0.560 (14,22)
52	0.740 (18,78)	0.761 (19,32)	0.495 (12,58)	0.560 (14,22)
68	0.938 (23,83)	0.962 (24,43)	0.850 (21,6)	0.858 (21,8)
84	1.141 (28,99)	1.165 (29,59)	1.047 (26,6)	1.063 (27,0)

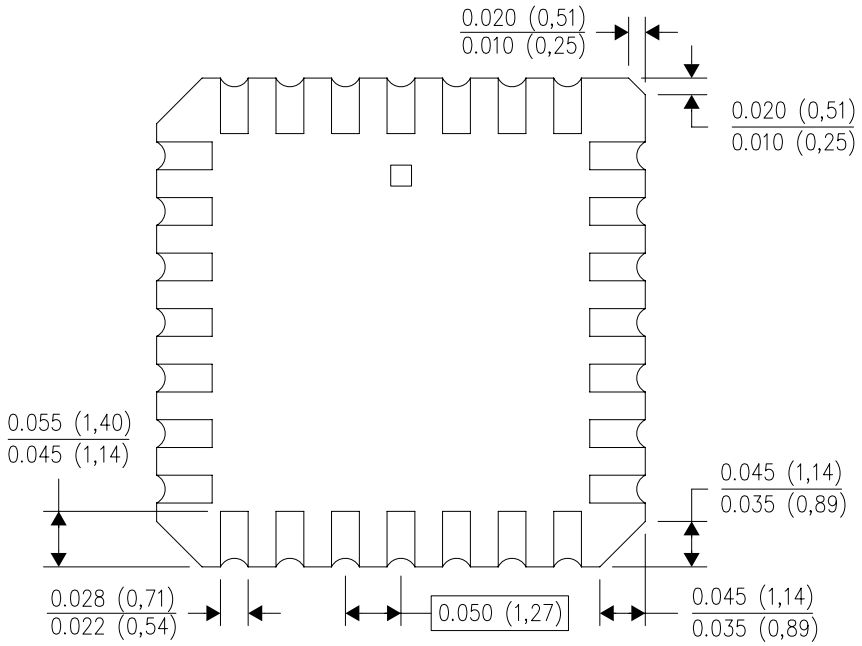

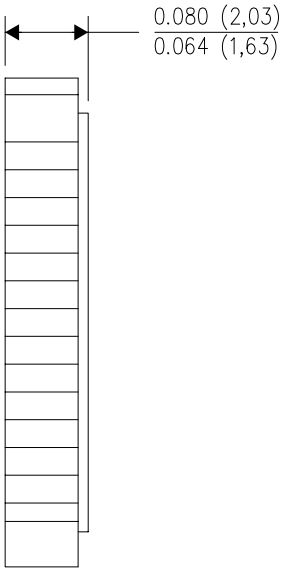

4040140/D 01/11

NOTES:
A. All linear dimensions are in inches (millimeters).
B. This drawing is subject to change without notice.
C. This package can be hermetically sealed with a metal lid.
D. Falls within JEDEC MS–004

MECHANICAL DATA

NS (R-PDSO-G)** **PLASTIC SMALL-OUTLINE PACKAGE**

14-PINS SHOWN

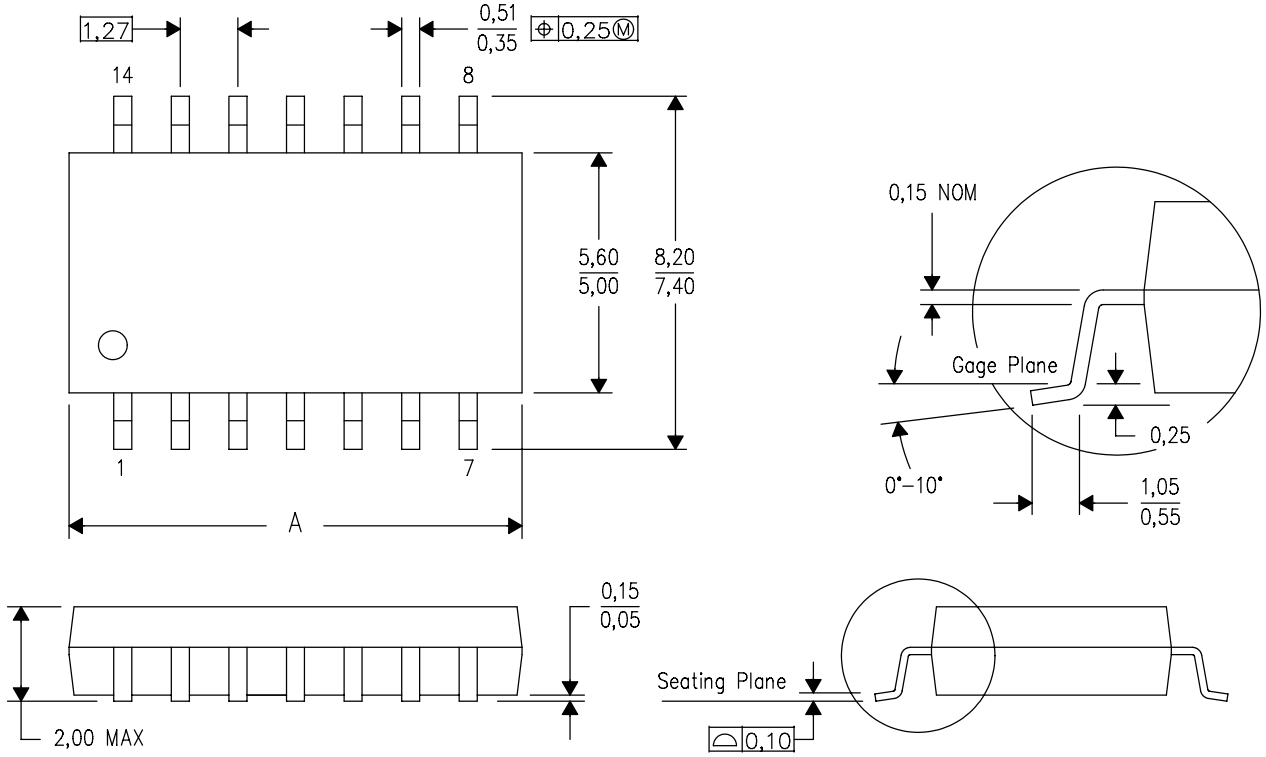

DIM \ PINS **	14	16	20	24
A MAX	10,50	10,50	12,90	15,30
A MIN	9,90	9,90	12,30	14,70

4040062/C 03/03

NOTES:
A. All linear dimensions are in millimeters.
B. This drawing is subject to change without notice.
C. Body dimensions do not include mold flash or protrusion, not to exceed 0,15.

JG (R-GDIP-T8) **CERAMIC DUAL-IN-LINE**

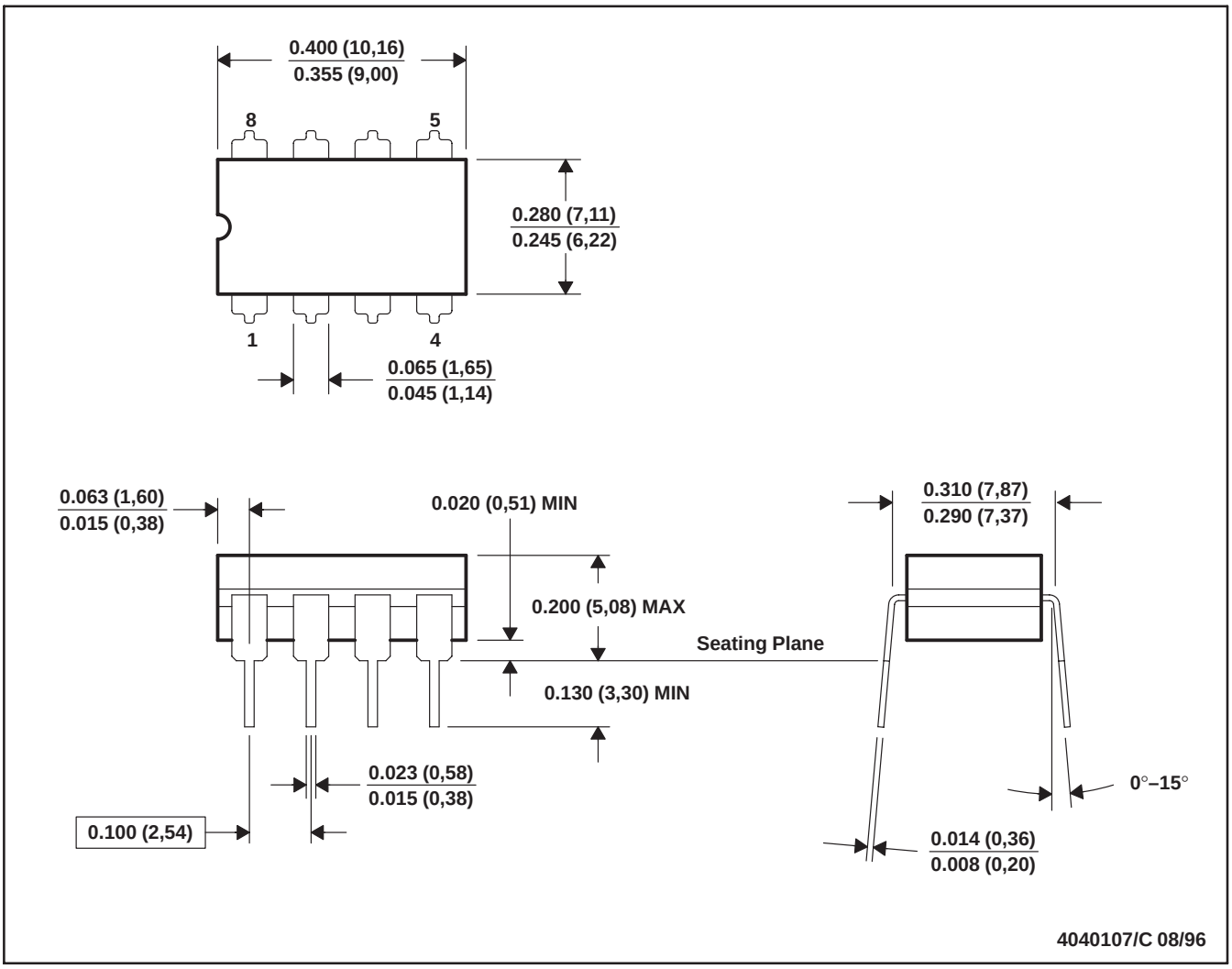

NOTES: A. All linear dimensions are in inches (millimeters).
B. This drawing is subject to change without notice.
C. This package can be hermetically sealed with a ceramic lid using glass frit.
D. Index point is provided on cap for terminal identification.
E. Falls within MIL STD 1835 GDIP1-T8

P (R–PDIP–T8) PLASTIC DUAL–IN–LINE PACKAGE

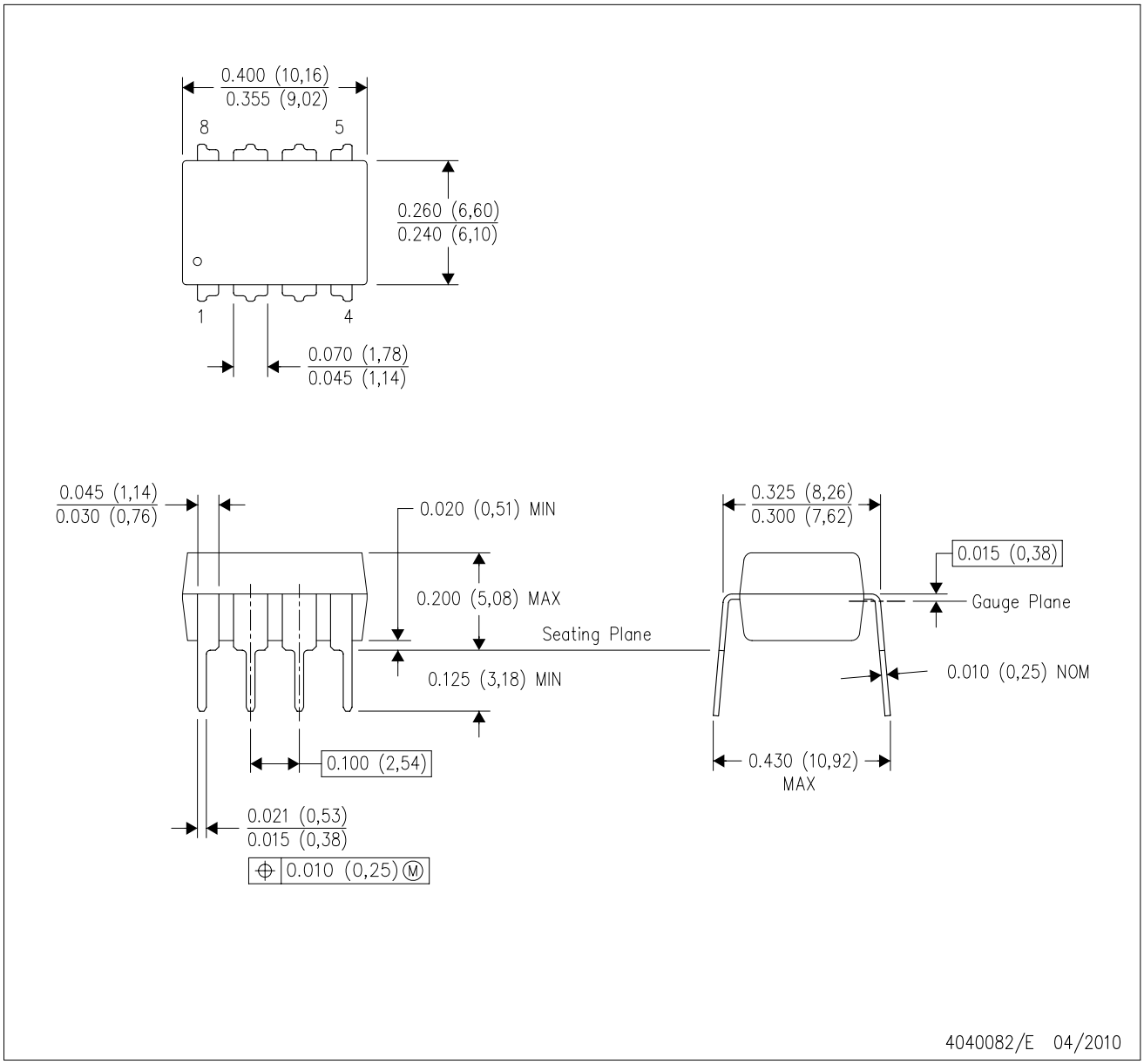

NOTES:
A. All linear dimensions are in inches (millimeters).
B. This drawing is subject to change without notice.
C. Falls within JEDEC MS–001 variation BA.

N (R–PDIP–T**) PLASTIC DUAL–IN–LINE PACKAGE

16 PINS SHOWN

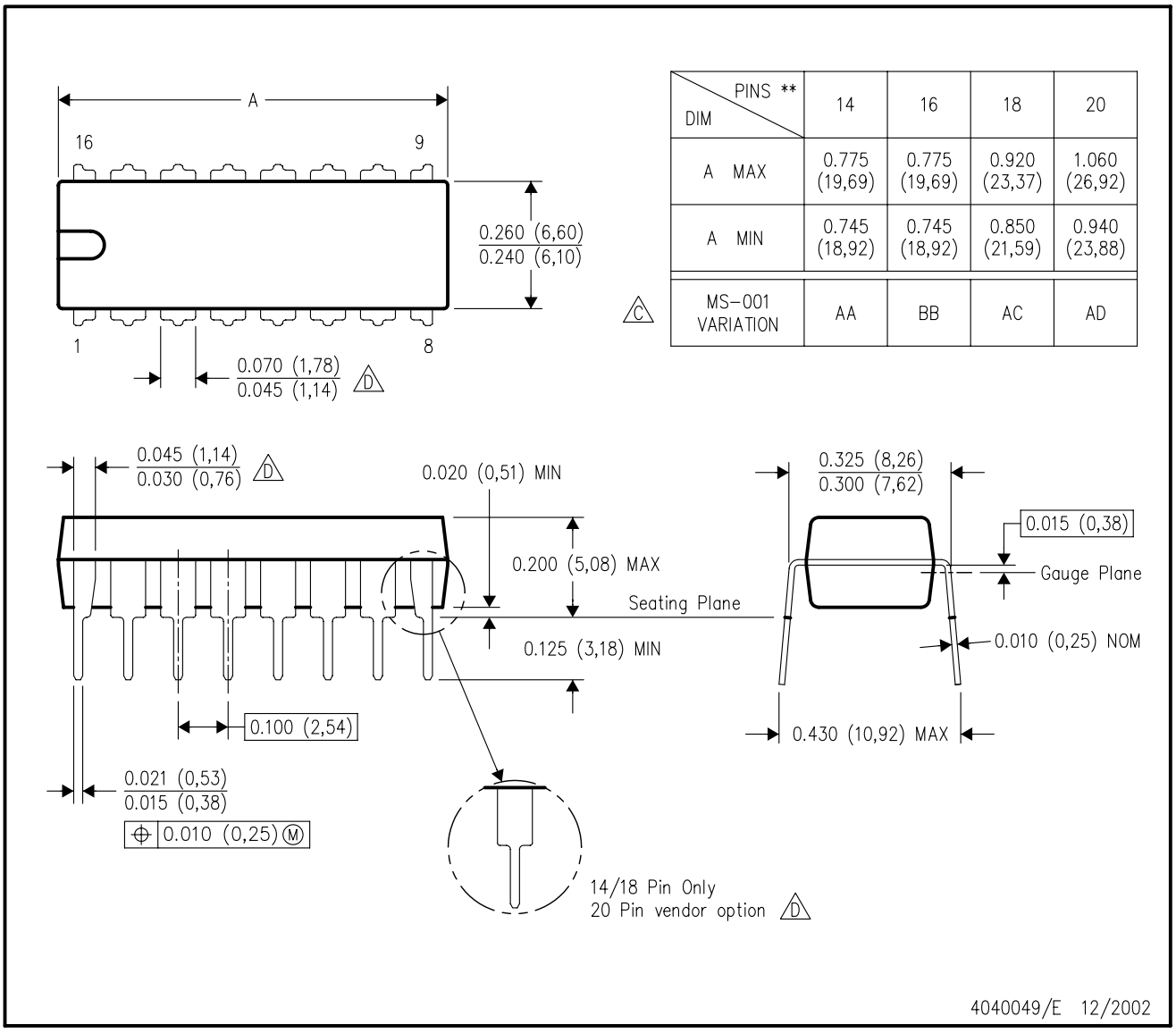

DIM \ PINS **	14	16	18	20
A MAX	0.775 (19,69)	0.775 (19,69)	0.920 (23,37)	1.060 (26,92)
A MIN	0.745 (18,92)	0.745 (18,92)	0.850 (21,59)	0.940 (23,88)
MS–001 VARIATION (C)	AA	BB	AC	AD

NOTES:
A. All linear dimensions are in inches (millimeters).
B. This drawing is subject to change without notice.
C. Falls within JEDEC MS–001, except 18 and 20 pin minimum body length (Dim A).
D. The 20 pin end lead shoulder width is a vendor option, either half or full width.

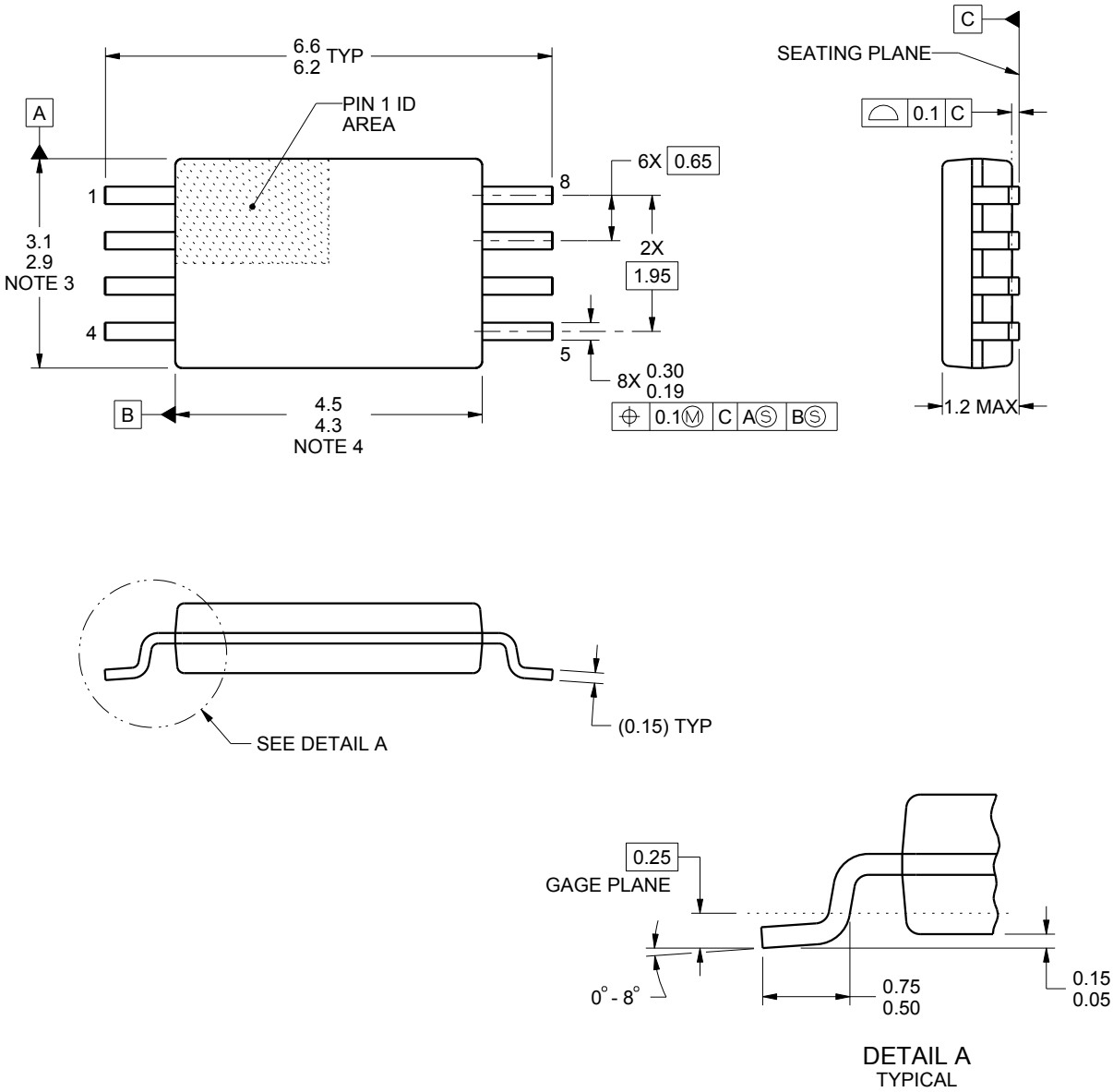

NOTES:

1. All linear dimensions are in millimeters. Any dimensions in parenthesis are for reference only. Dimensioning and tolerancing per ASME Y14.5M.
2. This drawing is subject to change without notice.
3. This dimension does not include mold flash, protrusions, or gate burrs. Mold flash, protrusions, or gate burrs shall not exceed 0.15 mm per side.
4. This dimension does not include interlead flash. Interlead flash shall not exceed 0.25 mm per side.
5. Reference JEDEC registration MO-153, variation AA.

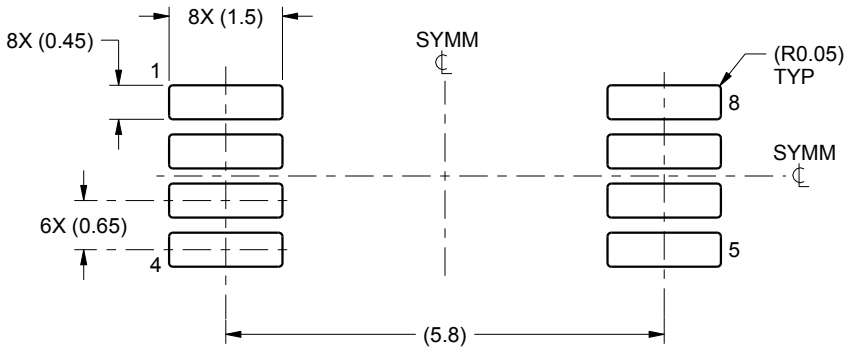

LAND PATTERN EXAMPLE
SCALE:10X

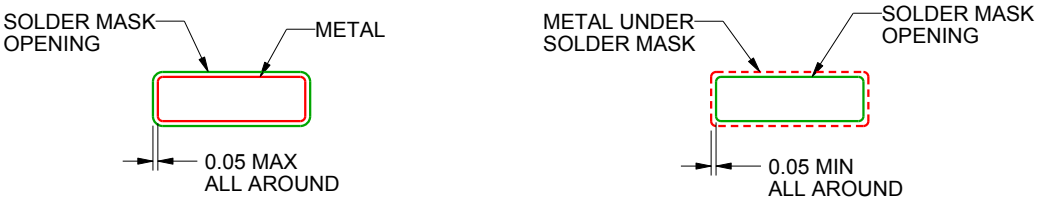

NON SOLDER MASK
DEFINED

SOLDER MASK
DEFINED

SOLDER MASK DETAILS
NOT TO SCALE

4221848/A 02/2015

NOTES: (continued)

6. Publication IPC-7351 may have alternate designs.
7. Solder mask tolerances between and around signal pads can vary based on board fabrication site.

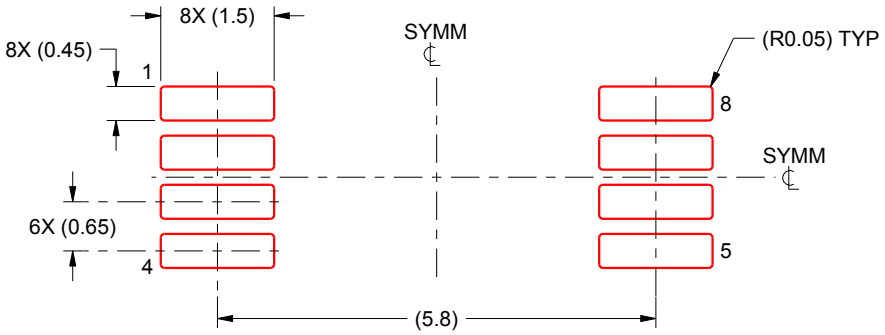

SOLDER PASTE EXAMPLE
BASED ON 0.125 mm THICK STENCIL
SCALE:10X

4221848/A 02/2015

NOTES: (continued)

8. Laser cutting apertures with trapezoidal walls and rounded corners may offer better paste release. IPC-7525 may have alternate design recommendations.
9. Board assembly site may have different recommendations for stencil design.

W (R–GDFP–F14) CERAMIC DUAL FLATPACK

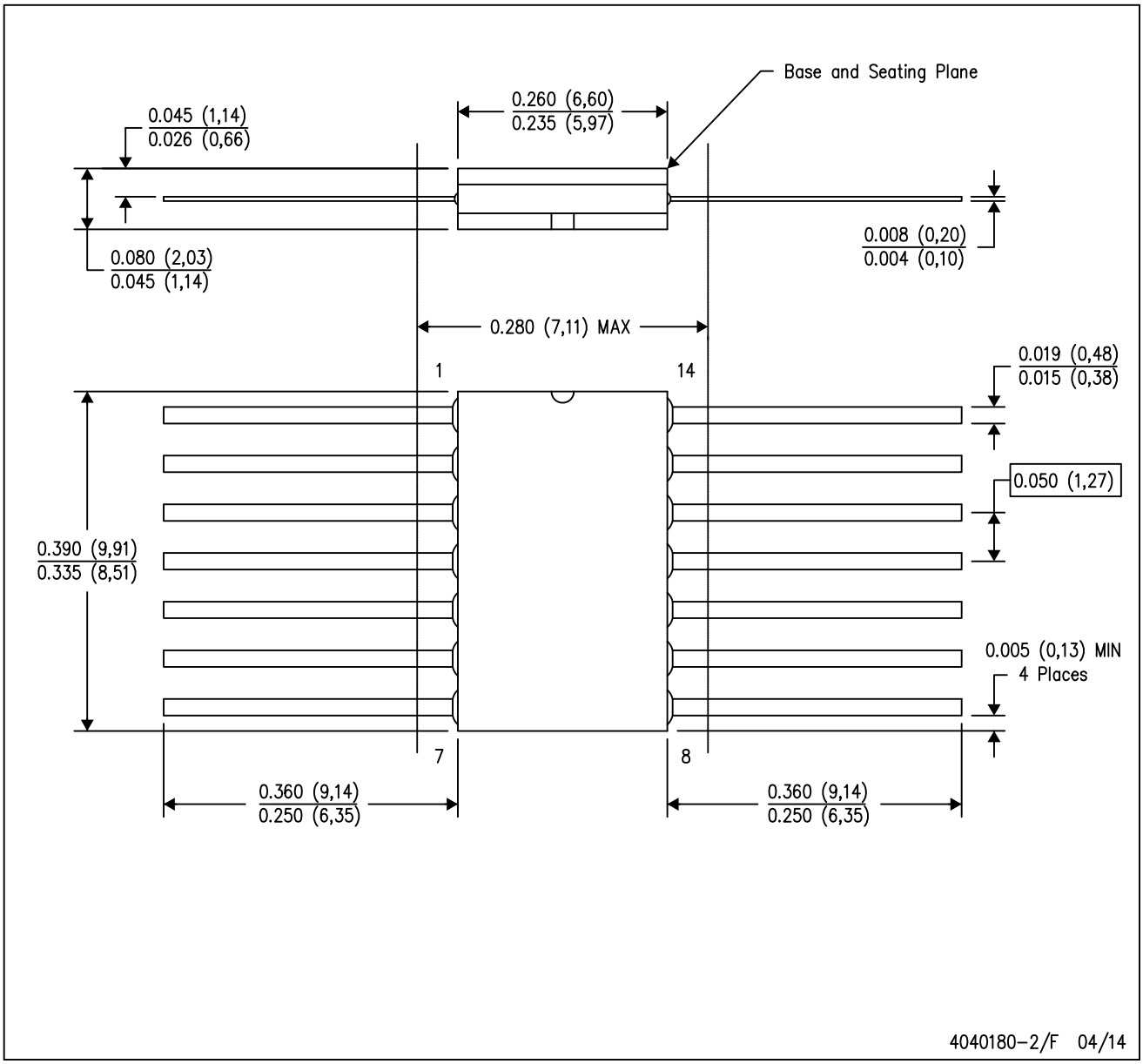

NOTES:
A. All linear dimensions are in inches (millimeters).
B. This drawing is subject to change without notice.
C. This package can be hermetically sealed with a ceramic lid using glass frit.
D. Index point is provided on cap for terminal identification only.
E. Falls within MIL STD 1835 GDFP1–F14

J 14 CDIP - 5.08 mm max height

CERAMIC DUAL IN LINE PACKAGE

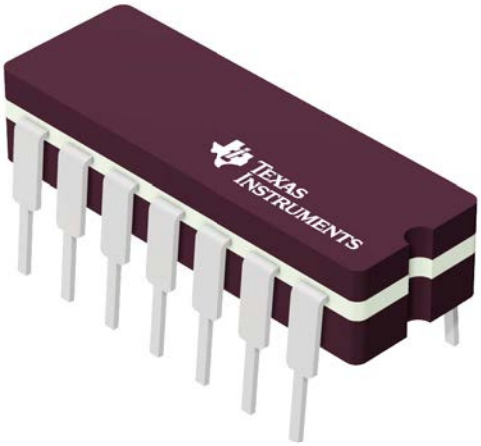

Images above are just a representation of the package family, actual package may vary.
Refer to the product data sheet for package details.

4040083-5/G

PACKAGE OUTLINE

J0014A

CDIP - 5.08 mm max height

CERAMIC DUAL IN LINE PACKAGE

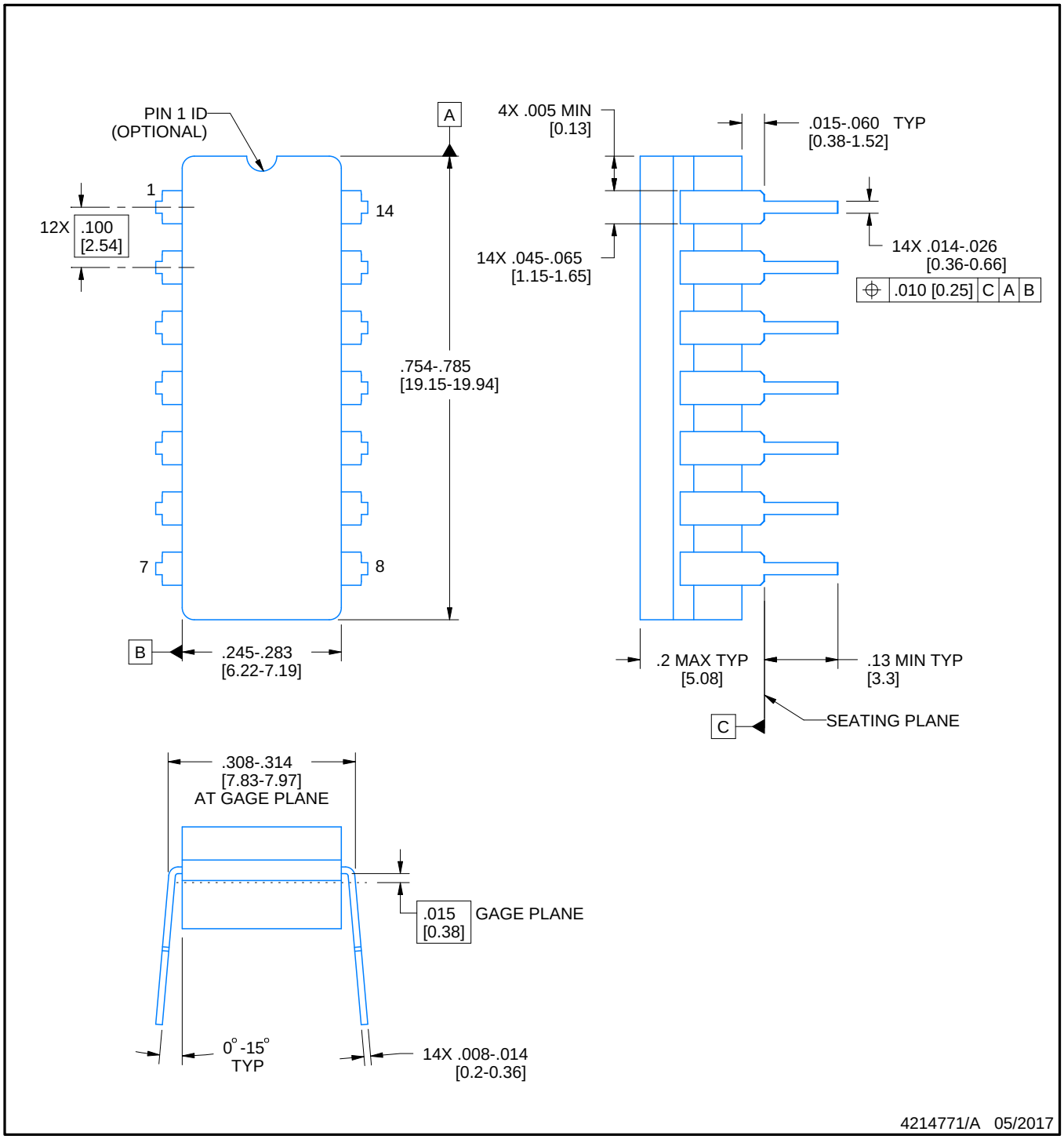

NOTES:

1. All controlling linear dimensions are in inches. Dimensions in brackets are in millimeters. Any dimension in brackets or parenthesis are for reference only. Dimensioning and tolerancing per ASME Y14.5M.
2. This drawing is subject to change without notice.
3. This package is hermitically sealed with a ceramic lid using glass frit.
4. Index point is provided on cap for terminal identification only and on press ceramic glass frit seal only.
5. Falls within MIL-STD-1835 and GDIP1-T14.

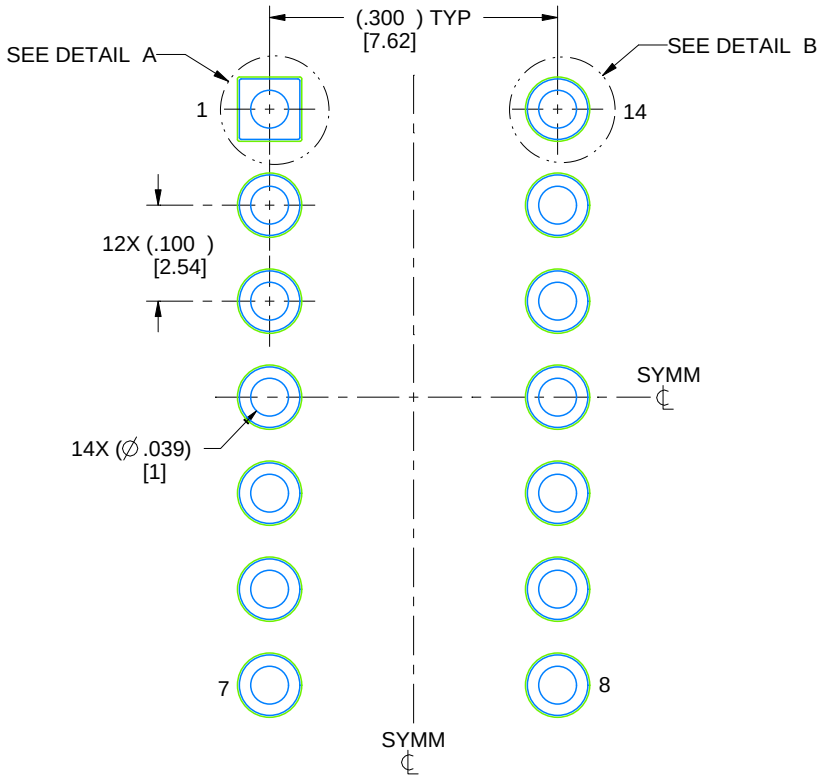

LAND PATTERN EXAMPLE
NON-SOLDER MASK DEFINED
SCALE: 5X

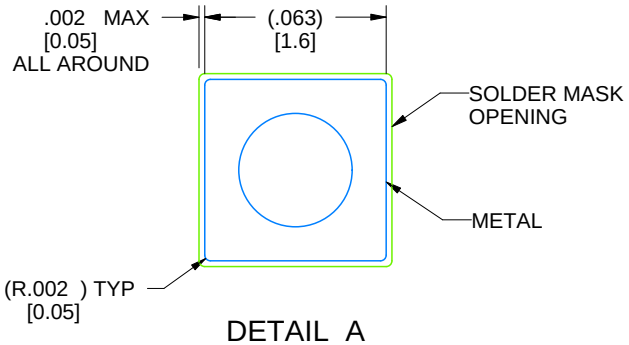

DETAIL A
SCALE: 15X

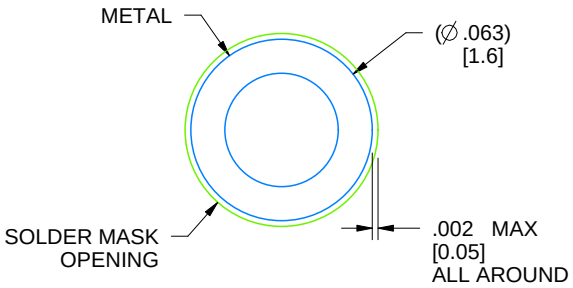

DETAIL B
13X, SCALE: 15X

4214771/A 05/2017

D (R–PDSO–G14) PLASTIC SMALL OUTLINE

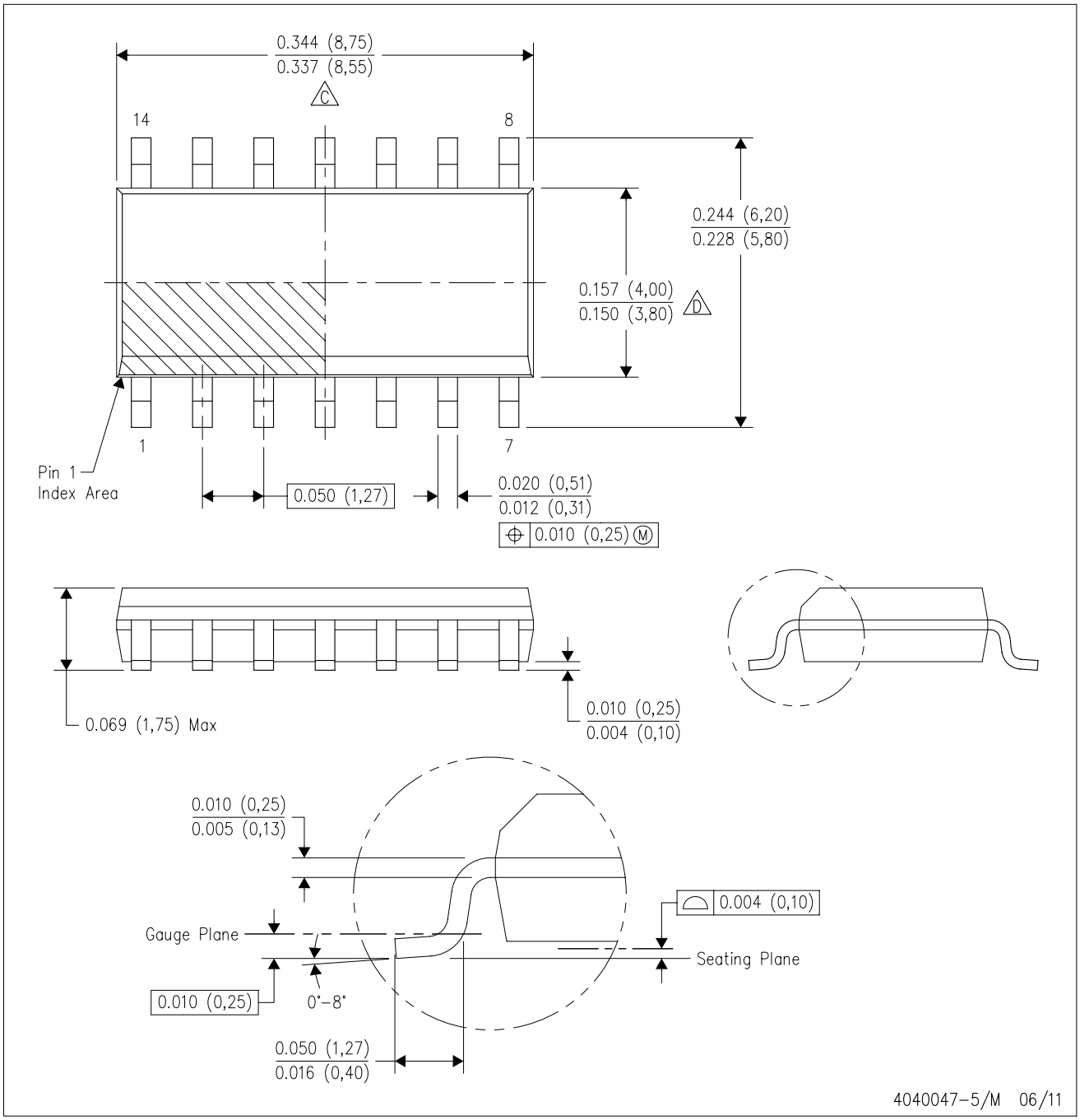

NOTES:
A. All linear dimensions are in inches (millimeters).
B. This drawing is subject to change without notice.
C. Body length does not include mold flash, protrusions, or gate burrs. Mold flash, protrusions, or gate burrs shall not exceed 0.006 (0,15) each side.
D. Body width does not include interlead flash. Interlead flash shall not exceed 0.017 (0,43) each side.
E. Reference JEDEC MS–012 variation AB.

D (R–PDSO–G14) PLASTIC SMALL OUTLINE

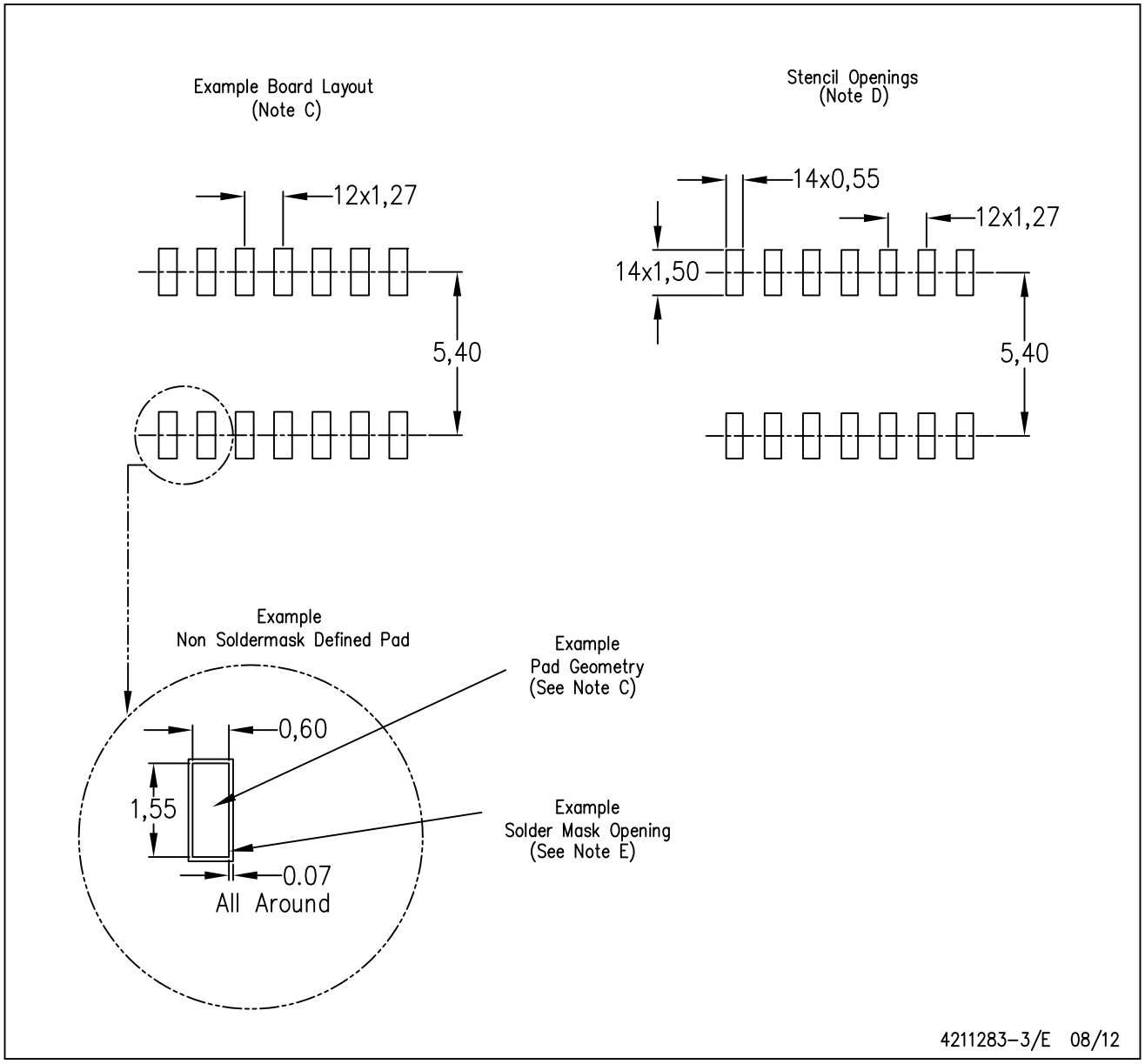

NOTES:
A. All linear dimensions are in millimeters.
B. This drawing is subject to change without notice.
C. Publication IPC–7351 is recommended for alternate designs.
D. Laser cutting apertures with trapezoidal walls and also rounding corners will offer better paste release. Customers should contact their board assembly site for stencil design recommendations. Refer to IPC–7525 for other stencil recommendations.
E. Customers should contact their board fabrication site for solder mask tolerances between and around signal pads.

PW (R–PDSO–G14) PLASTIC SMALL OUTLINE

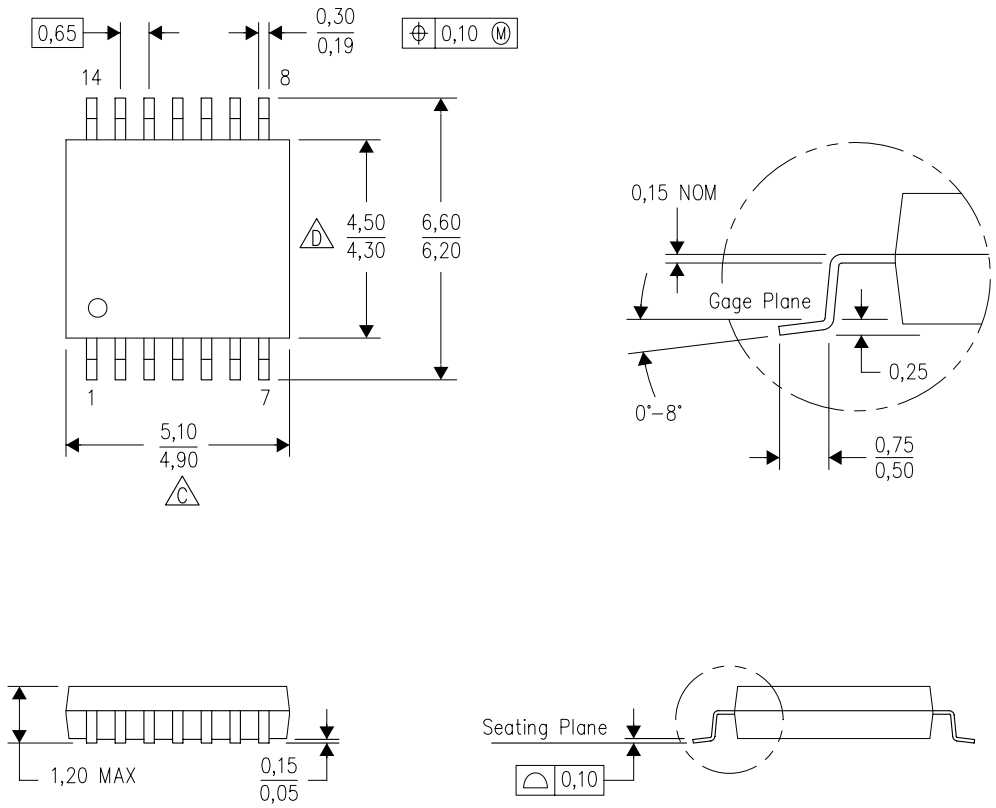

NOTES:
A. All linear dimensions are in millimeters. Dimensioning and tolerancing per ASME Y14.5M–1994.
B. This drawing is subject to change without notice.
C. Body length does not include mold flash, protrusions, or gate burrs. Mold flash, protrusions, or gate burrs shall not exceed 0,15 each side.
D. Body width does not include interlead flash. Interlead flash shall not exceed 0,25 each side.
E. Falls within JEDEC MO–153

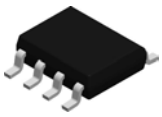

PACKAGE OUTLINE

D0008A

SOIC - 1.75 mm max height

SMALL OUTLINE INTEGRATED CIRCUIT

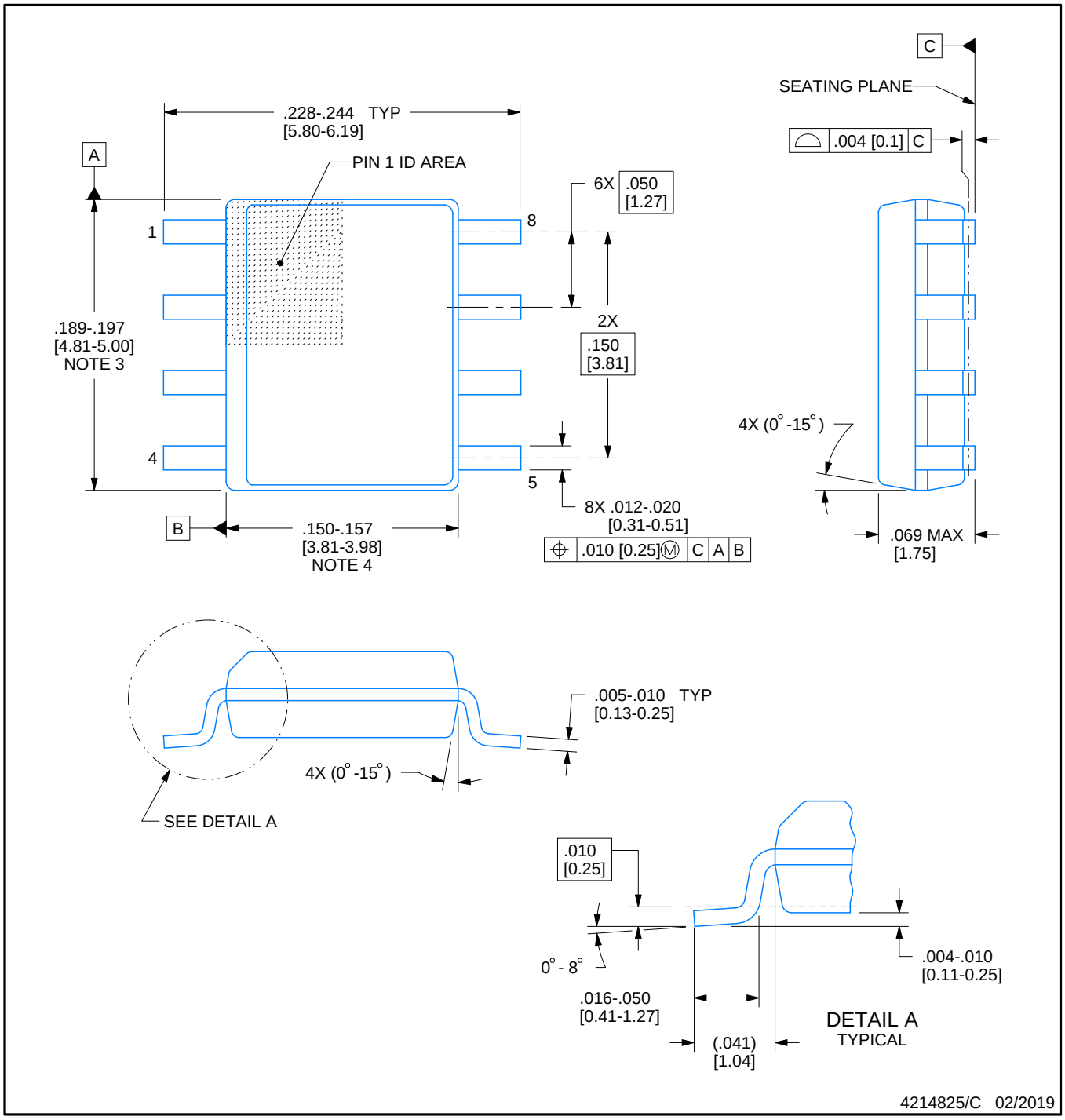

NOTES:

1. Linear dimensions are in inches [millimeters]. Dimensions in parenthesis are for reference only. Controlling dimensions are in inches. Dimensioning and tolerancing per ASME Y14.5M.
2. This drawing is subject to change without notice.
3. This dimension does not include mold flash, protrusions, or gate burrs. Mold flash, protrusions, or gate burrs shall not exceed .006 [0.15] per side.
4. This dimension does not include interlead flash.
5. Reference JEDEC registration MS-012, variation AA.

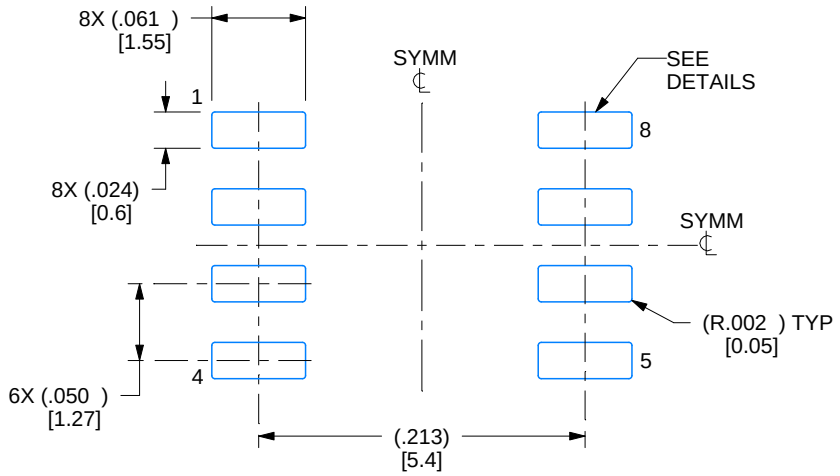

LAND PATTERN EXAMPLE
EXPOSED METAL SHOWN
SCALE:8X

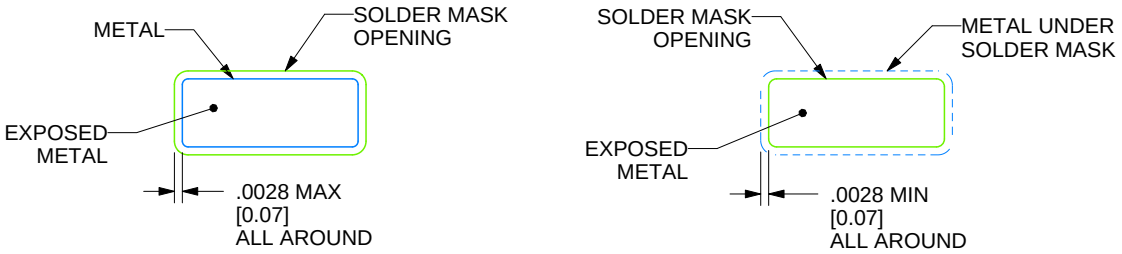

SOLDER MASK DETAILS

4214825/C 02/2019

NOTES: (continued)

6. Publication IPC-7351 may have alternate designs.
7. Solder mask tolerances between and around signal pads can vary based on board fabrication site.

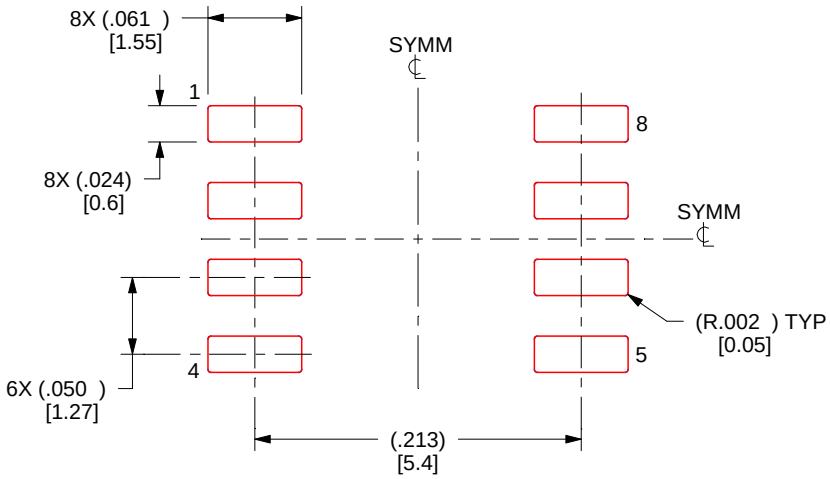

SOLDER PASTE EXAMPLE
BASED ON .005 INCH [0.125 MM] THICK STENCIL
SCALE:8X

4214825/C 02/2019

NOTES: (continued)

8. Laser cutting apertures with trapezoidal walls and rounded corners may offer better paste release. IPC-7525 may have alternate design recommendations.
9. Board assembly site may have different recommendations for stencil design.

MECHANICAL DATA

PS (R-PDSO-G8) **PLASTIC SMALL-OUTLINE PACKAGE**

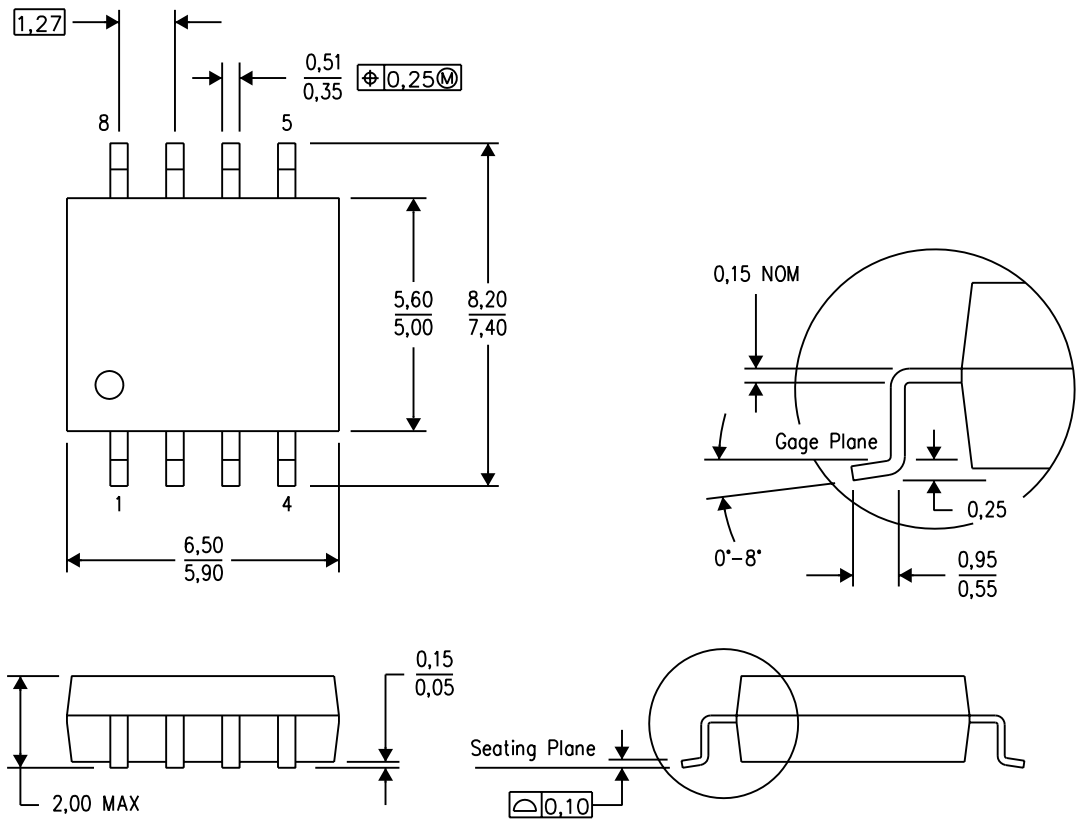

NOTES:
A. All linear dimensions are in millimeters.
B. This drawing is subject to change without notice.
C. Body dimensions do not include mold flash or protrusion, not to exceed 0,15.

PS (R-PDSO-G8) PLASTIC SMALL OUTLINE

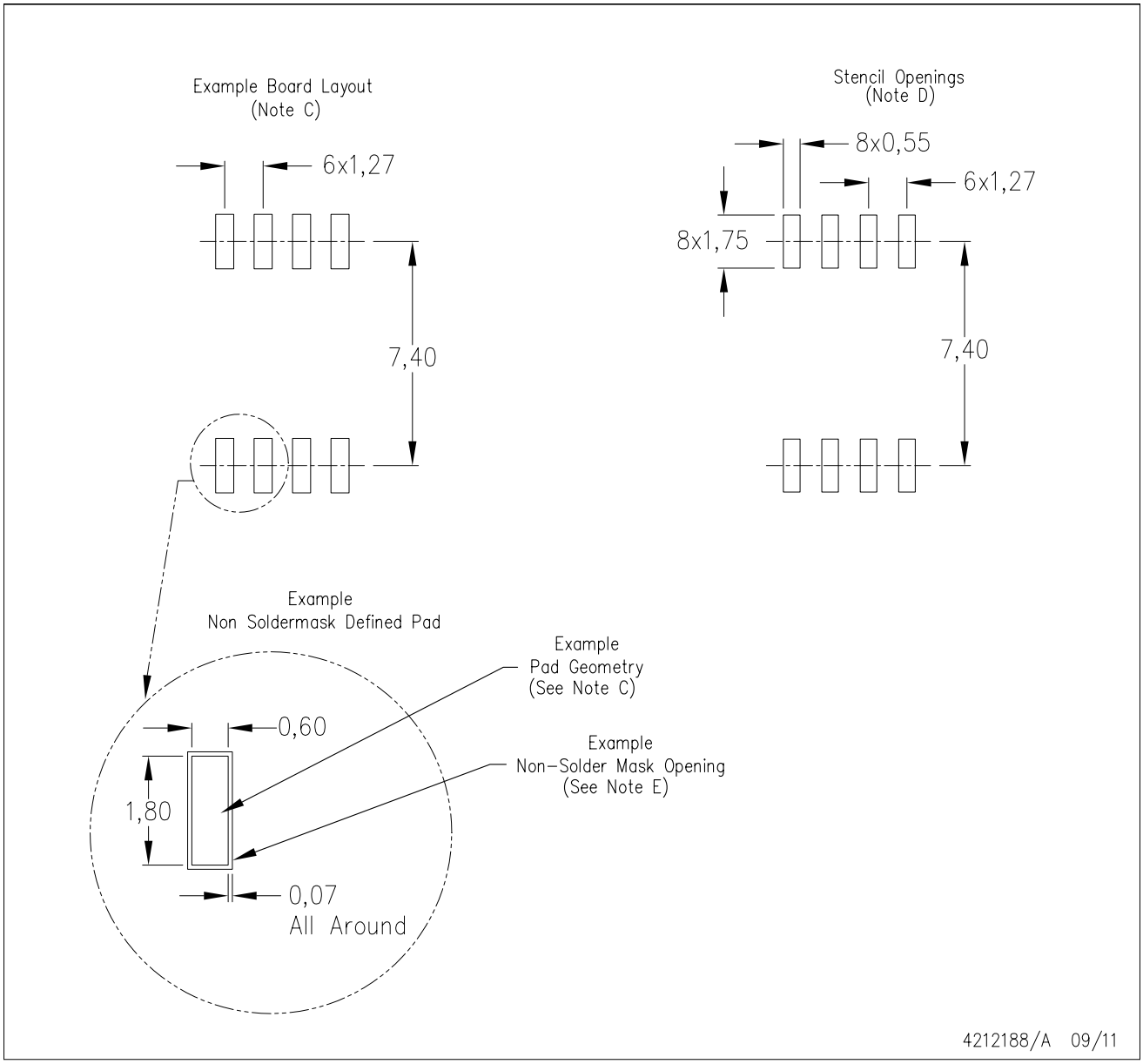

NOTES:
A. All linear dimensions are in millimeters.
B. This drawing is subject to change without notice.
C. Publication IPC-7351 is recommended for alternate designs.
D. Laser cutting apertures with trapezoidal walls and also rounding corners will offer better paste release. Customers should contact their board assembly site for stencil design recommendations. Refer to IPC-7525 for other stencil recommendations.
E. Customers should contact their board fabrication site for solder mask tolerances between and around signal pads.

IMPORTANT NOTICE AND DISCLAIMER

TI PROVIDES TECHNICAL AND RELIABILITY DATA (INCLUDING DATASHEETS), DESIGN RESOURCES (INCLUDING REFERENCE DESIGNS), APPLICATION OR OTHER DESIGN ADVICE, WEB TOOLS, SAFETY INFORMATION, AND OTHER RESOURCES “AS IS” AND WITH ALL FAULTS, AND DISCLAIMS ALL WARRANTIES, EXPRESS AND IMPLIED, INCLUDING WITHOUT LIMITATION ANY IMPLIED WARRANTIES OF MERCHANTABILITY, FITNESS FOR A PARTICULAR PURPOSE OR NON-INFRINGEMENT OF THIRD PARTY INTELLECTUAL PROPERTY RIGHTS.

These resources are intended for skilled developers designing with TI products. You are solely responsible for (1) selecting the appropriate TI products for your application, (2) designing, validating and testing your application, and (3) ensuring your application meets applicable standards, and any other safety, security, or other requirements. These resources are subject to change without notice. TI grants you permission to use these resources only for development of an application that uses the TI products described in the resource. Other reproduction and display of these resources is prohibited. No license is granted to any other TI intellectual property right or to any third party intellectual property right. TI disclaims responsibility for, and you will fully indemnify TI and its representatives against, any claims, damages, costs, losses, and liabilities arising out of your use of these resources.

TI’s products are provided subject to TI’s Terms of Sale (https:www.ti.com/legal/termsofsale.html) or other applicable terms available either on ti.com or provided in conjunction with such TI products. TI’s provision of these resources does not expand or otherwise alter TI’s applicable warranties or warranty disclaimers for TI products.

Mailing Address: Texas Instruments, Post Office Box 655303, Dallas, Texas 75265
Copyright © 2021, Texas Instruments Incorporated