EX-10 SERIES

Amplifier Built-in Ultra-slim Photoelectric Sensor

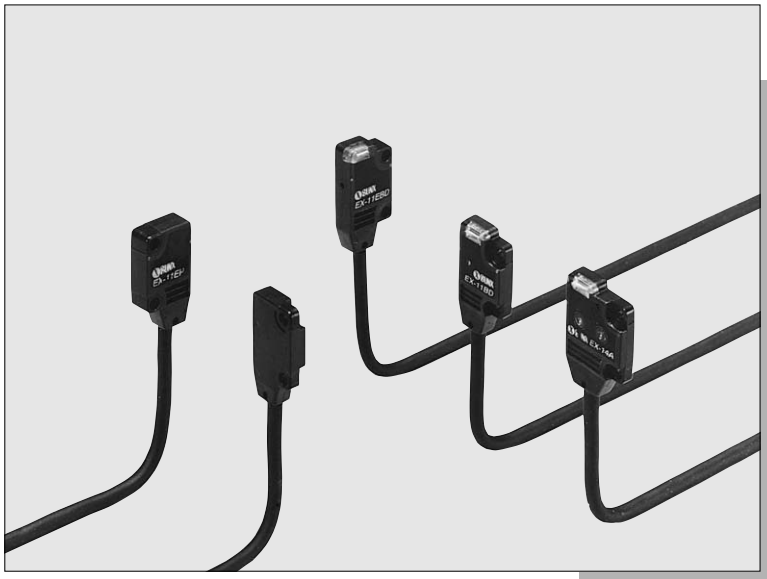

Amplifier Built-in Extraordinarily Small and Slim Size

CE Marked
Conforming to EMC Directive
(Excluding EX-15□/EX-17□)

Smallest Body, Just 3.5mm Thick

It can be mounted in a very small space as its size is just W10×H14.5×D3.5mm (thru-beam, front sensing type).

High-speed Response Time: 0.5ms

The sensor is suitable for detecting small and high-speed traveling objects.

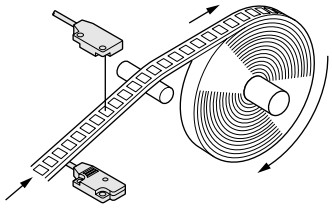

Flexible Mounting

The diffuse reflective type sensor is front sensing and is so thin that it gives an impression of being just pasted on the mounting base. The thru-beam type is available as front sensing type, as well as, side sensing type, allowing flexible mounting.

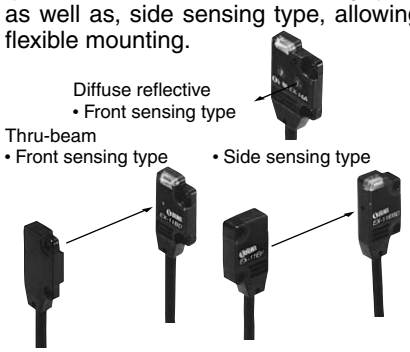

Bright 2-color Indicator

A convenient 2-color indicator has been incorporated in the miniature body.

Waterproof

The sensor can be hosed down because of its IP67 construction and the non-corrosive stainless steel mounting bracket.

Note: However, take care that if it is exposed to water splashes during operation, it may detect a water drop itself.

Operation Mode Switch

Thru-beam type sensor incorporated with an operation mode switch on the bifurcation is also available. It helps you to test the operability before start-up.

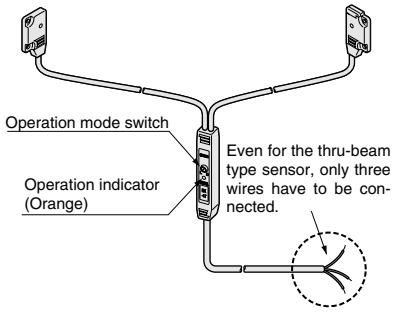

Globally Usable

PNP output type which is much in demand in Europe is available.
Of course, it conforms to the EMC directive.

Red Beam Makes Beam Alignment Easy

The red LED beam projected from the emitter helps you to align the sensor heads.

APPLICATIONS

Verifying position of PCBs

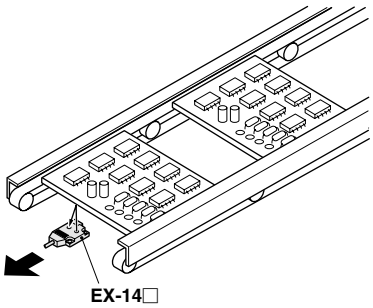

Detecting ICs

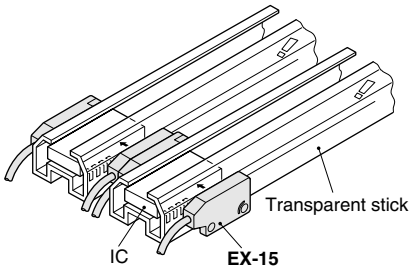

Detecting PCB rack

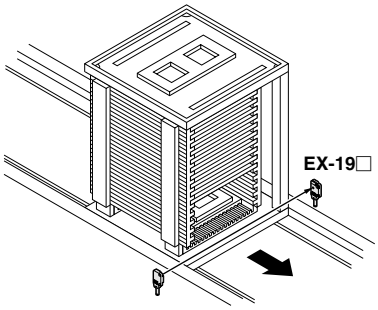

Detecting wafer cassette

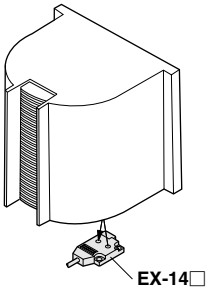

Detecting thin ring

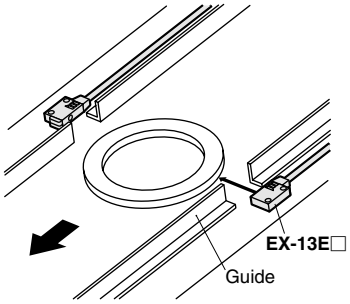

Checking for absence of capacitor in tray

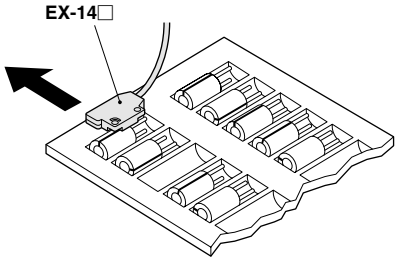

Mountable with M3 Screws

Non-corrosive stainless steel type mounting bracket is also available.

- **MS-EX10-1 [Cold rolled carbon steel (SPCC)] and MS-EX10-11 [Stainless steel (SUS304)] (mounting bracket for the front sensing type)**

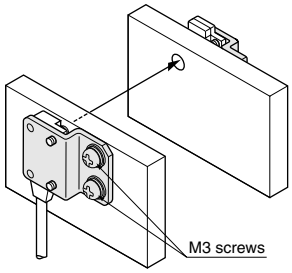

- **MS-EX10-2 [Cold rolled carbon steel (SPCC)] and MS-EX10-12 [Stainless steel (SUS304)] (mounting bracket for the side sensing type)**

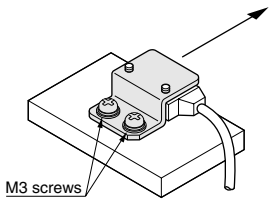

- **MS-EX10-3 [Cold rolled carbon steel (SPCC)] and MS-EX10-13 [Stainless steel (SUS304)] (L-shaped mounting bracket)**

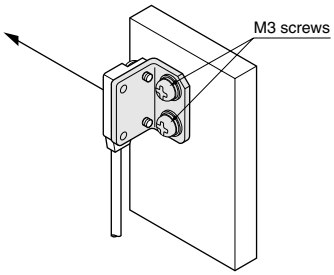

Minimum Sensing Object: ϕ 1mm

EX-11□, **EX-11E□**, **EX-15** and **EX-15E** are incorporated with ϕ1mm slit masks so that ϕ1mm, or more, object can be detected. Hence, they are suitable for precise positioning or small parts detection.

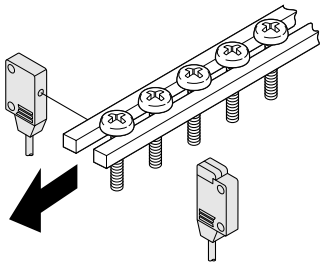

Long Sensing Range: 1m (EX-19□)

A sensing range of 1m has been realized with a slim size of just 3.5mm. It can be used to detect even wide IC trays.

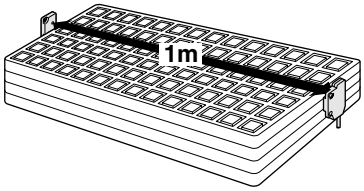

Background Suppression (EX-14□)

- **Not affected by background**
  Even a specular background separated by 100mm, or more, is not detected.
  (However, the background should be directly opposite.)

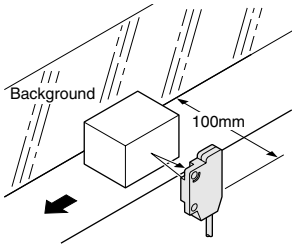

- **Black object reliably detected**
  It can reliably detect dark color objects since it is convergent reflective type.

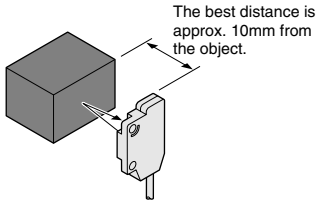

EX-10

ORDER GUIDE

Type			Appearance	Sensing range	Model No.	Output operation	Min. sensing object
NPN output	Thru-beam	Front sensing		150mm	EX-11A	Light-ON	ϕ1mm opaque object (Setting distance between the emitter and the receiver: 150mm)
					EX-11B	Dark-ON	
				500mm	EX-13A	Light-ON	ϕ2mm opaque object (Setting distance between the emitter and the receiver: 500mm)
					EX-13B	Dark-ON	
				1m	EX-19A NEW	Light-ON	ϕ2mm opaque object (Setting distance between the emitter and the receiver: 1m)
					EX-19B NEW	Dark-ON	
		With operation mode switch on the bifurcation		150mm	EX-15	Switchable either Light-ON or Dark-ON	ϕ1mm opaque object (Setting distance between the emitter and the receiver: 150mm)
				500mm	EX-17		ϕ2mm opaque object (Setting distance between the emitter and the receiver: 500mm)
		Side sensing		150mm	EX-11EA	Light-ON	ϕ1mm opaque object (Setting distance between the emitter and the receiver: 150mm)
					EX-11EB	Dark-ON	
				500mm	EX-13EA	Light-ON	ϕ2mm opaque object (Setting distance between the emitter and the receiver: 500mm)
					EX-13EB	Dark-ON	
		With operation mode switch on the bifurcation		150mm	EX-15E	Switchable either Light-ON or Dark-ON	ϕ1mm opaque object (Setting distance between the emitter and the receiver: 150mm)
				500mm	EX-17E		ϕ2mm opaque object (Setting distance between the emitter and the receiver: 500mm)
	Convergent reflective (Diffused beam type)	Front sensing		2 to 25mm (Note 1) (Convergent point: 10mm)	EX-14A	Light-ON	ϕ0.1mm copper wire (Setting distance: 10mm)
					EX-14B	Dark-ON	
PNP output	Thru-beam	Front sensing		150mm	EX-11A-PN NEW	Light-ON	ϕ1mm opaque object (Setting distance between the emitter and the receiver: 150mm)
					EX-11B-PN NEW	Dark-ON	
				500mm	EX-13A-PN NEW	Light-ON	ϕ2mm opaque object (Setting distance between the emitter and the receiver: 500mm)
					EX-13B-PN NEW	Dark-ON	
				1m	EX-19A-PN NEW	Light-ON	ϕ2mm opaque object (Setting distance between the emitter and the receiver: 1m)
					EX-19B-PN NEW	Dark-ON	
		Side sensing		150mm	EX-11EA-PN NEW	Light-ON	ϕ1mm opaque object (Setting distance between the emitter and the receiver: 150mm)
					EX-11EB-PN NEW	Dark-ON	
				500mm	EX-13EA-PN NEW	Light-ON	ϕ2mm opaque object (Setting distance between the emitter and the receiver: 500mm)
					EX-13EB-PN NEW	Dark-ON	
	Convergent reflective (Diffused beam type)	Front sensing		2 to 25mm (Note 1) (Convergent point: 10mm)	NEW EX-14A-PN	Light-ON	ϕ0.1mm copper wire (Setting distance: 10mm)
					NEW EX-14B-PN	Dark-ON	

NOTE: Mounting bracket is not supplied with the sensor. Please select from the range of optional sensor mounting brackets (six types).

Note 1: The sensor does not detect even a specular background if it is separated by 100mm or more. (However, the background should be directly opposite.)

OPTIONS

Designation	Model No.		Description
Sensor mounting bracket	**MS-EX10-1**		Mounting bracket for the front sensing type sensor [Cold rolled carbon steel (SPCC)] (The thru-beam type sensor needs two brackets.)
	MS-EX10-2		Mounting bracket for the side sensing type sensor [Cold rolled carbon steel (SPCC)] (The thru-beam type sensor needs two brackets.)
	MS-EX10-3		L-shaped mounting bracket sensor [Cold rolled carbon steel (SPCC)] (The thru-beam type sensor needs two brackets.)
	MS-EX10-11		Mounting bracket for the front sensing type sensor [Stainless steel (SUS304)] (The thru-beam type sensor needs two brackets.)
	MS-EX10-12		Mounting bracket for the side sensing type sensor [Stainless steel (SUS304)] (The thru-beam type sensor needs two brackets.)
	MS-EX10-13		L-shaped mounting bracket [Stainless steel (SUS304)] (The thru-beam type sensor needs two brackets.)
Slit mask	**OS-EX10-12** (Slit size ϕ1.2mm)	Slit on one side	· Sensing range: 600mm [**EX-19□**] 250mm [**EX-13□**, **EX-17**] · Min. sensing object: ϕ2mm
		Slit on both sides	· Sensing range: 400mm [**EX-19□**] 200mm [**EX-13□**, **EX-17**] · Min. sensing object: ϕ1.2mm
	OS-EX10-15 (Slit size ϕ1.5mm)	Slit on one side	· Sensing range: 800mm [**EX-19□**] 350mm [**EX-13□**] · Min. sensing object: ϕ2mm
		Slit on both sides	· Sensing range: 500mm [**EX-19□**] 300mm [**EX-13□**] · Min. sensing object: ϕ1.5mm
	OS-EX10E-12 (Slit size ϕ1.2mm)	Slit on one side	· Sensing range: 250mm [**EX-13E□**, **EX-17E**] · Min. sensing object: ϕ2mm
		Slit on both sides	· Sensing range: 200mm [**EX-13E□**, **EX-17E**] · Min. sensing object: ϕ1.2mm
Sensor checker (Note)	**CHX-SC2**		It is useful for beam alignment of thru-beam type sensors. The optimum receiver position is given by indicators, as well as, an audio signal.

Sensor mounting bracket

• MS-EX10-1

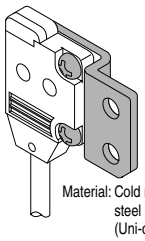

Material: Cold rolled carbon steel (SPCC) (Uni-chrome plated)
Two M2 (length 4mm) pan head screws are attached.

• MS-EX10-11

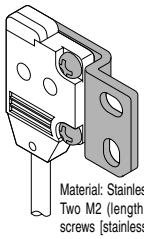

Material: Stainless steel (SUS304)
Two M2 (length 4mm) pan head screws [stainless steel (SUS304)] are attached.

• MS-EX10-2

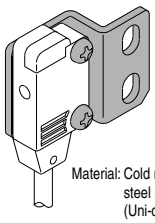

Material: Cold rolled carbon steel (SPCC) (Uni-chrome plated)
Two M2 (length 8mm) pan head screws are attached.

• MS-EX10-12

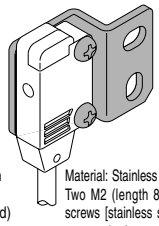

Material: Stainless steel (SUS304)
Two M2 (length 8mm) pan head screws [stainless steel (SUS304)] are attached.

• MS-EX10-3

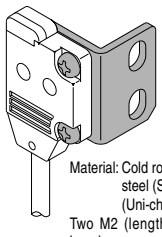

Material: Cold rolled carbon steel (SPCC) (Uni-chrome plated)
Two M2 (length 4mm) pan head screws, and two M2 (length 8mm) pan head screws are attached.

• MS-EX10-13

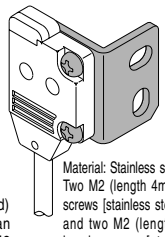

Material: Stainless steel (SUS304)
Two M2 (length 4mm) pan head screws [stainless steel (SUS304)] and two M2 (length 8mm) pan head screws [stainless steel (SUS304)] are attached.

Slit mask

• OS-EX10-12
• OS-EX10-15

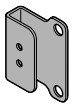

• OS-EX10E-12

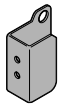

Example of mounting (OS-EX10E-12)

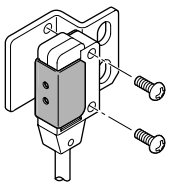

Tighten along with the sensor mounting bracket.

Sensor checker

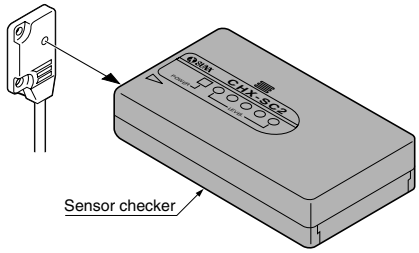

EX-10

SPECIFICATIONS

Item	Type	Thru-beam					Convergent reflective	Thru-beam • with operation mode switch on bifurcation			
		Front sensing	Side sensing	Front sensing	Side sensing	Front sensing	Front sensing	Front sensing	Side sensing	Front sensing	Side sensing
Model No.	Light-ON	EX-11A(-PN)	EX-11EA(-PN)	EX-13A(-PN)	EX-13EA(-PN)	EX-19A(-PN)	EX-14A(-PN)	EX-15 (Note 1)	EX-15E (Note 1)	EX-17 (Note 1)	EX-17E (Note 1)
	Dark-ON	EX-11B(-PN)	EX-11EB(-PN)	EX-13B(-PN)	EX-13EB(-PN)	EX-19B(-PN)	EX-14B(-PN)				
Sensing range		150mm		500mm		1m	2 to 25mm (Note 2) (Conv. point: 10mm)	150mm		500mm	
Min. sensing object		ϕ1mm opaque object (Setting distance between emitter and receiver: 150mm)		ϕ2mm opaque object (Setting distance between emitter and receiver: 500mm)		ϕ2mm opaque object (Setting distance between emitter and receiver: 1m)	ϕ0.1mm copper wire (Setting distance: 10mm)	ϕ1mm opaque object (Setting distance between emitter and receiver: 150mm)		ϕ2mm opaque object (Setting distance between emitter and receiver: 500mm)	
Hysteresis		———					15% or less of operation distance	———			
Repeatability (perpendicular to sensing axis)		0.05mm or less					0.1mm or less	0.05mm or less			
Supply voltage		12 to 24V DC ± 10% Ripple P-P10% or less									
Current consumption		Emitter: 10mA or less, Receiver: 15mA or less					20mA or less	30mA or less			
Output		<NPN output type> NPN open-collector transistor • Maximum sink current: 50mA • Applied voltage: 30V DC or less (between output and 0V) • Residual voltage: 1V or less (at 50mA sink current) 0.4V or less (at 16mA sink current) <PNP output type> PNP open-collector transistor • Maximum source current: 50mA • Applied voltage: 30V DC or less (between output and ＋V) • Residual voltage: 1V or less (at 50mA source current) 0.4V or less (at 16mA source current)						NPN open-collector transistor • Maximum sink current: 100mA • Applied voltage: 30V DC or less (between output and 0V) • Residual voltage: 1.5V or less (at 100mA sink current) 0.4V or less (at 16mA sink current)			
	Utilization category	DC-12 or DC-13						———			
	Short-circuit protection	Incorporated									
Response time		0.5ms or less									
Operation indicator		Red Led (lights up when the output is ON)						Orange LED (lights up when the output is ON), located on the bifurcation			
Incident beam indicator		———						Red LED (lights up under light received condition), located on the receiver			
Stability indicator		Green LED (lights up under stable light received condition or stable dark condition)						Green LED (lights up under stable light received condition or stable dark condition), located on the receiver			
Environmental resistance	Pollution degree	3 (Industrial environment)						———			
	Protection	IP67 (IEC)									
	Ambient temperature	− 25 to ＋ 55°C (No dew condensation or icing allowed), Storage: − 30 to ＋ 70°C									
	Ambient humidity	35 to 85% RH, Storage: 35 to 85% RH									
	Ambient illuminance	Sunlight: 10,000ℓx at the light-receiving face, Incandescent light: 3,000ℓx at the light-receiving face									
	EMC	Emission: EN50081-2, Immunity: EN50082-2						———			
	Voltage withstandability	1,000V AC for one min. between all supply terminals connected together and enclosure									
	Insulation resistance	20MΩ, or more, with 250V DC megger between all supply terminals connected together and enclosure									
	Vibration resistance	10 to 500Hz frequency, 3mm amplitude in X, Y and Z directions for two hours each									
	Shock resistance	500m/s² acceleration (50G approx.) in X, Y and Z directions for three times each									
Emitting element		Red LED (modulated)									
Material		Enclosure: Polyethylene terephthalate Lens: Polyalylate						Enclosure: Polyethylene terephthalate Lens: Polyalylate, Bifurcation: Polyalylate			
Cable		0.1mm² 3-core (thru-beam type emitter: 2-core) cabtyre cable, 2m long						0.2mm² 3-core cabtyre cable, 2m long (beyond bifurcation; from emitter/receiver to bifurcation: 0.5m long)			
Cable extension		Extension up to total 50m is possible with 0.3mm², or more, cable (thru-beam type: emitter and receiver).						Extension up to total 100m is possible with 0.3mm², or more, cable.			
Weight		Emitter: 20g approx., Receiver: 20g approx.					20g approx.	55g approx.			
Accessories		Mounting screws: 2 sets					Mounting screws: 1 set	Mounting screws: 2 sets, Adjusting screwdriver: 1 No.			

Notes: 1) Either Light-ON or Dark-ON can be selected by the operation mode switch (located on the bifurcation).
2) The sensing range of convergent reflective type sensor is specified for white non-glossy paper (50 × 50mm) as the object.

I/O CIRCUIT AND WIRING DIAGRAMS

EX-11□ EX-13□ EX-19□ EX-14□ NPN output type

I/O circuit diagram

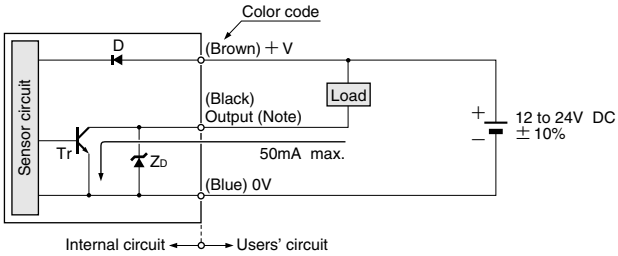

Note: The emitter of the thru-beam type sensor does not incorporate the output.

Symbols … D: Reverse supply polarity protection diode
ZD: Surge absorption zener diode
Tr : NPN output transistor

Wiring diagram

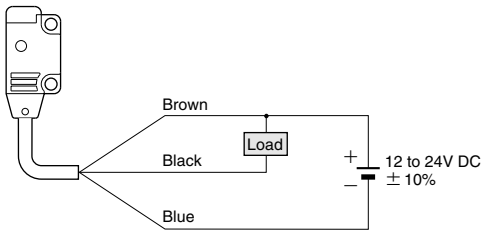

EX-11□-PN EX-13□-PN EX-19□-PN EX-14□-PN PNP output type

I/O circuit diagram

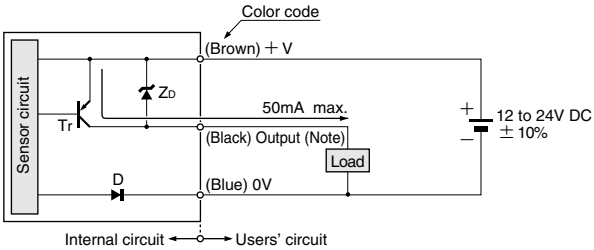

Note: The emitter of the thru-beam type sensor does not incorporate the output.

Symbols … D: Reverse supply polarity protection diode
ZD: Surge absorption zener diode
Tr : PNP output transistor

Wiring diagram

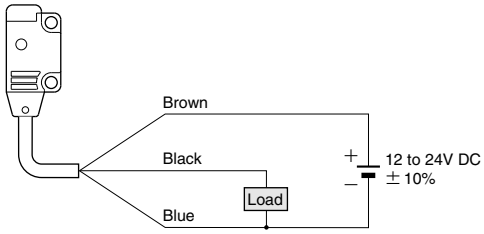

EX-15 EX-15E EX-17 EX-17E NPN output type

I/O circuit diagram

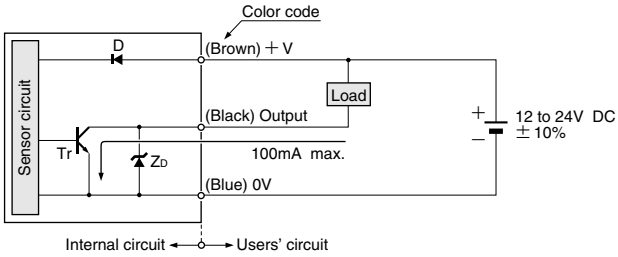

Symbols … D: Reverse supply polarity protection diode
ZD: Surge absorption zener diode
Tr : NPN output transistor

Wiring diagram

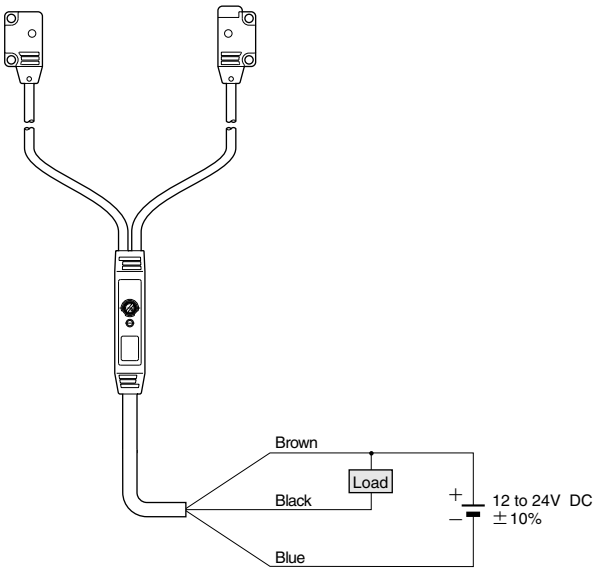

EX-10

SENSING CHARACTERISTICS (TYPICAL)

All models — Thru-beam type

Correlation between setting distance and excess gain

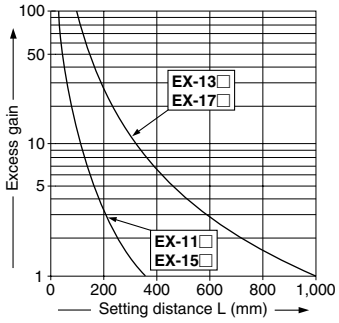

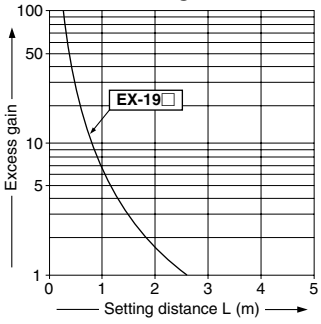

EX-11□ EX-11E□ EX-15 EX-15E — Thru-beam type

Parallel deviation

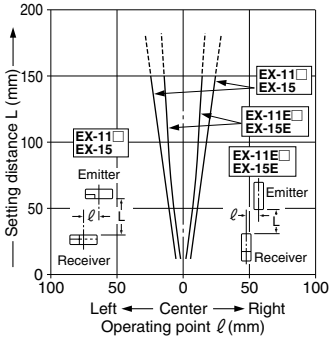

Angular deviation

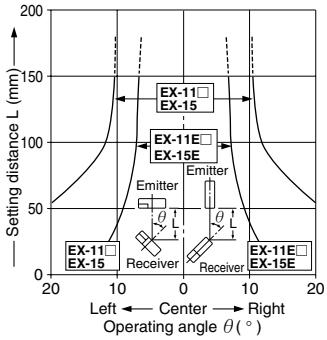

EX-13□ EX-13E□ EX-17 EX-17E — Thru-beam type

Parallel deviation

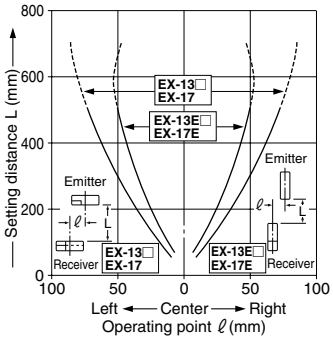

Angular deviation

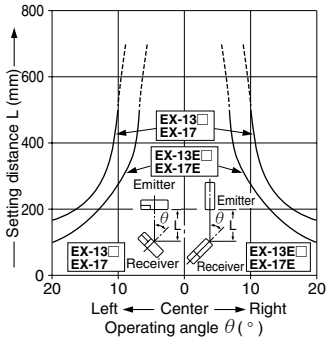

Parallel deviation with slit masks (ϕ1.2mm)

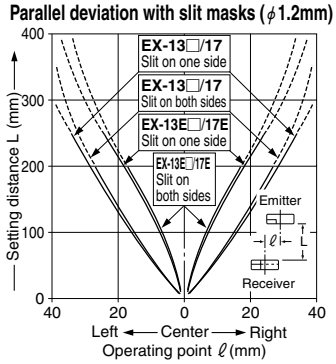

Parallel deviation with slit masks (ϕ1.5mm)

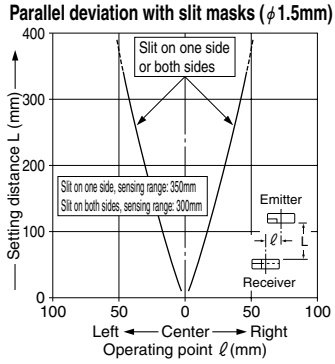

EX-19□ — Thru-beam type

Parallel deviation

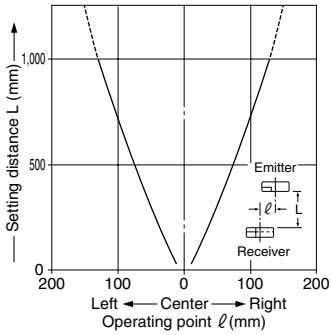

Angular deviation

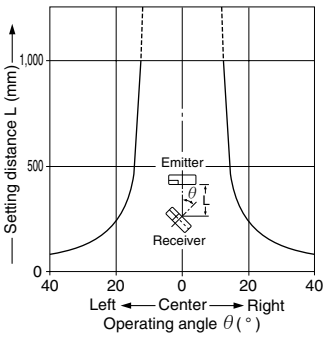

Parallel deviation with slit masks (ϕ1.2mm)

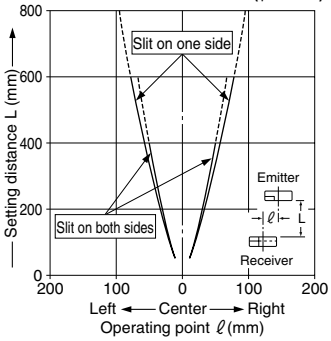

Parallel deviation with slit masks (ϕ1.5mm)

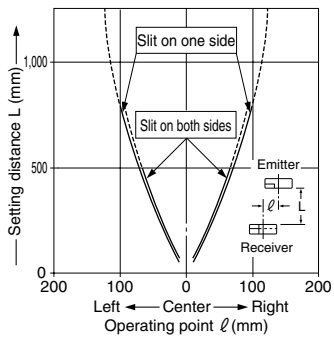

SENSING CHARACTERISTICS (TYPICAL)

EX-14□ Convergent reflective type

Sensing fields

• Horizontal (left and right) direction

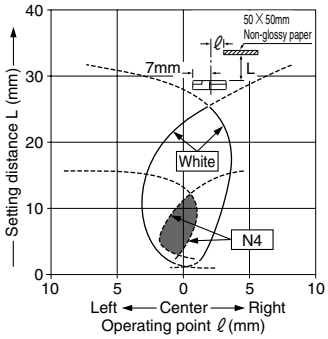

• Vertical (up and down) direction

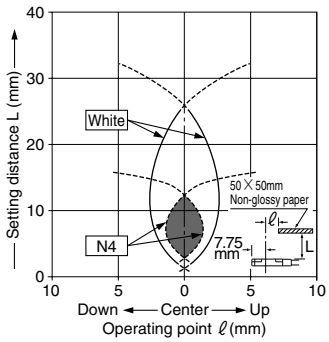

Correlation between lightness and sensing range

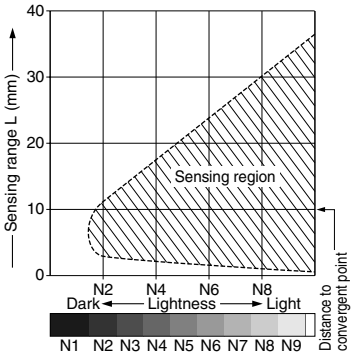

The sensing region is represented by oblique lines in the left figure. However, the sensitivity should be set with enough margin because of slight variation in products.

(Lightness shown on the left may differ slightly from the actual object condition.)

Correlation between material (50 × 50mm) and sensing range

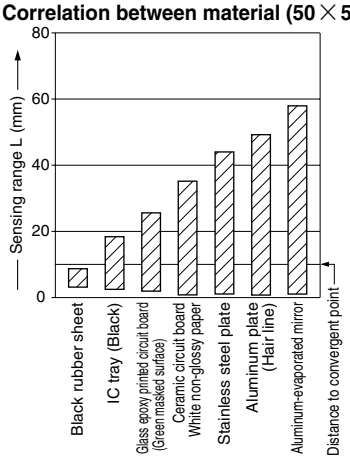

The bars in the graph indicate the sensing range for the respective material. However, there is a slight variation in the sensing range depending on the product. Further, if there is a reflective object (conveyor, etc.) in the background of the sensing object, since it affects the sensing, separate it by more than twice the sensing range shown in the left graph.

PRECAUTIONS FOR PROPER USE

⚠ This product is not a safety sensor. Its use is not intended or designed to protect life and prevent body injury or property damage from dangerous parts of machinery. It is a normal object detection sensor.

Mounting

• In case of mounting on tapped holes (Unit: mm)

Side sensing

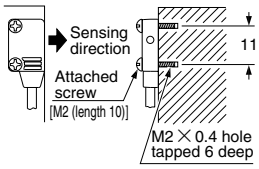

Front sensing

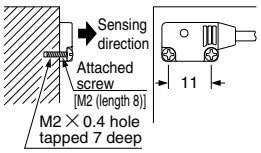

The tightening torque should be 0.2N·m or less.

• In case of using attached screws and nuts (Unit: mm)

Side sensing

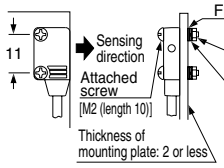

Front sensing

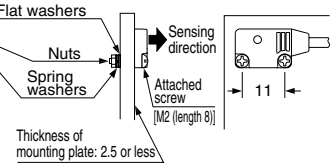

The tightening torque should be 0.2N·m or less.

Operation mode switch (EX-15, EX-15E, EX-17 and EX-17E only)

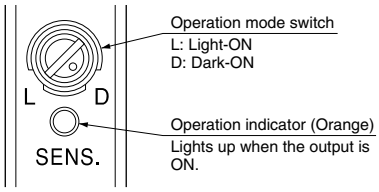

Switch position	Description
L D	Light-ON mode is set when the switch is turned fully clockwise (L side).
L D	Dark-ON mode is set when the switch is turned fully counterclockwise(D side).

Others

• Do not use during the initial transient time (50ms) (**EX-15**, **EX-15E**, **EX-17** and **EX-17E**: 100ms) after the power supply is switched on.

EX-10

DIMENSIONS (Unit: mm)

EX-11A□ EX-11B□ EX-13A□ EX-13B□ EX-19A□ EX-19B□ Sensor

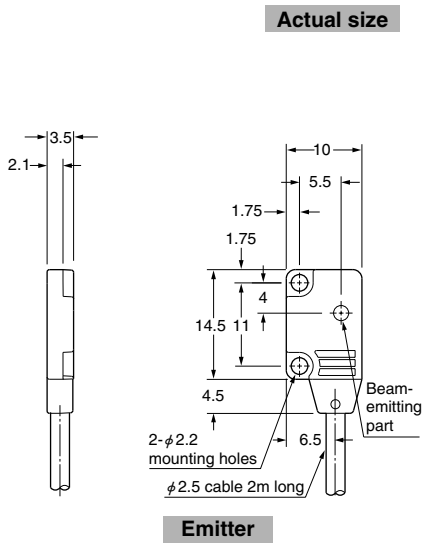

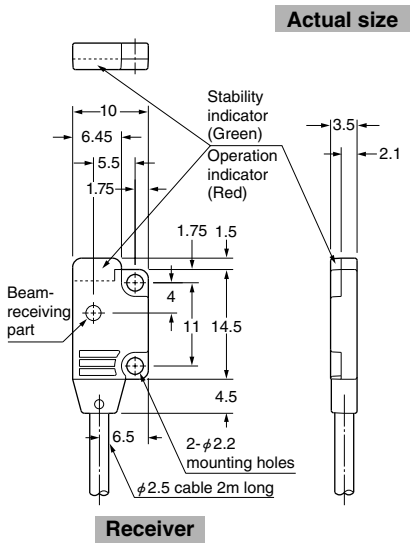

EX-11EA□ EX-11EB□ EX-13EA□ EX-13EB□ Sensor

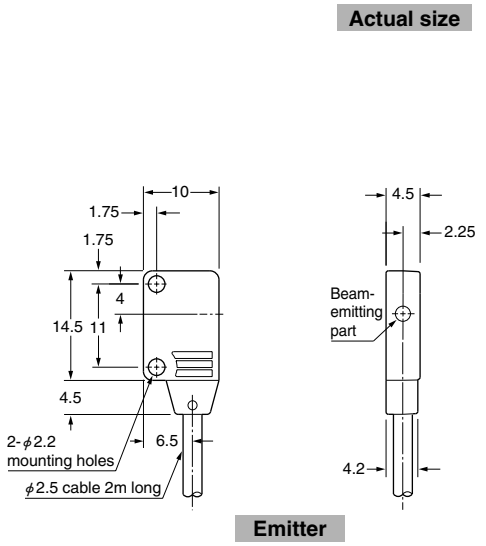

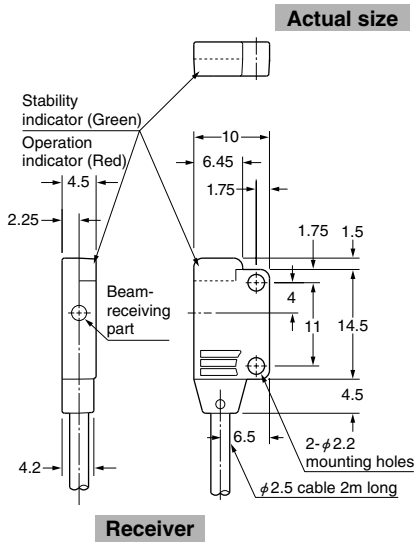

EX-15 EX-17 Sensor

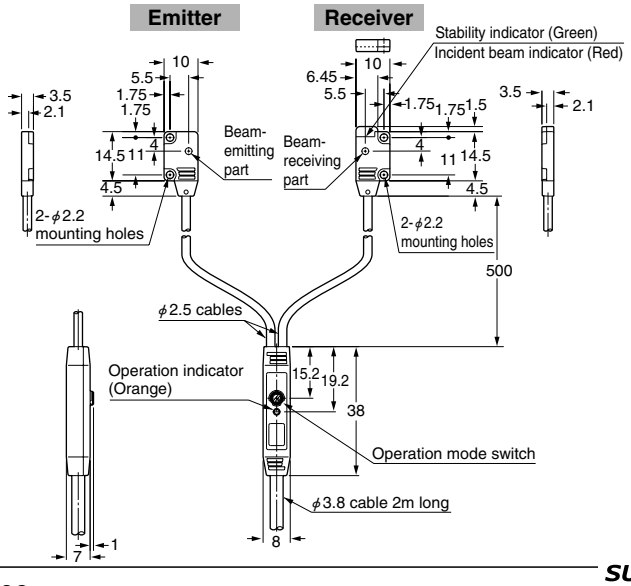

EX-15E EX-17E Sensor

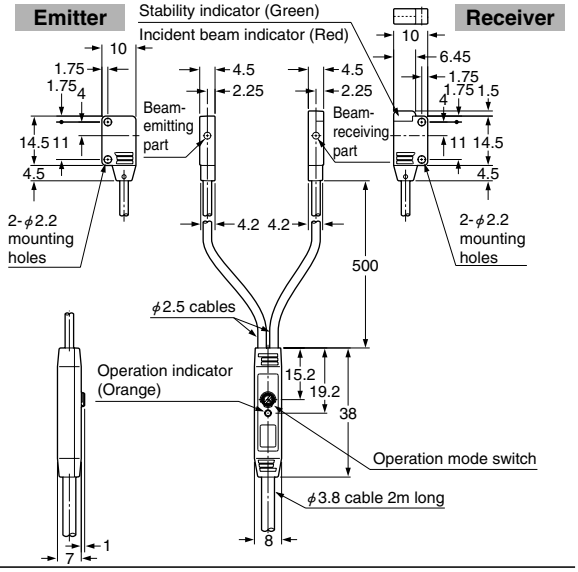

DIMENSIONS (Unit: mm)

EX-14A□ EX-14B□ Sensor

Actual size

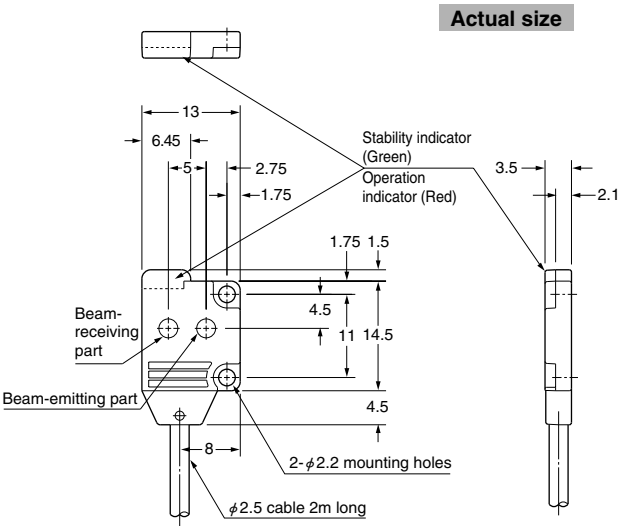

MS-EX10-1 Sensor mounting bracket (Optional)

Actual size

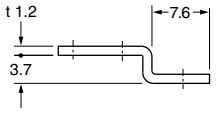

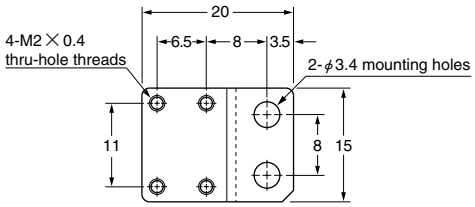

Material: Cold rolled carbon steel (SPCC)
(Uni-chrome plated)
Two M2 (length 4mm) pan head screws are attached.

Assembly dimensions

Mounting drawing with **EX-14□**

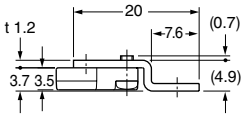

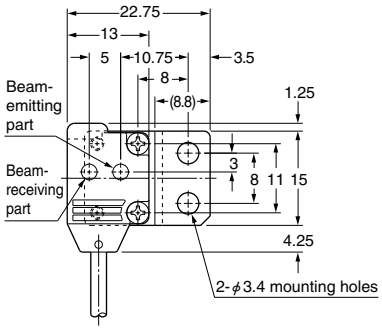

MS-EX10-2 Sensor mounting bracket (Optional)

Actual size

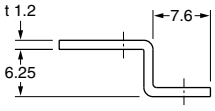

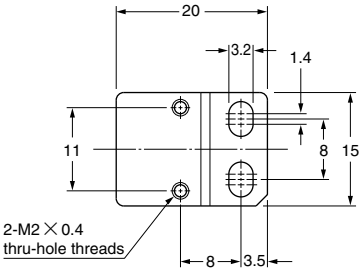

Material: Cold rolled carbon steel (SPCC)
(Uni-chrome plated)
Two M2 (length 8mm) pan head screws are attached.

Assembly dimensions

Mounting drawing with **EX-11E□** and **EX-13E□**

Actual size

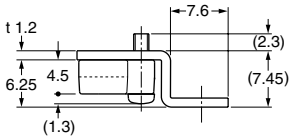

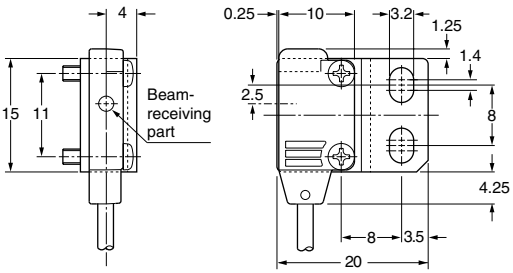

EX-10

DIMENSIONS (Unit: mm)

MS-EX10-3 Sensor mounting bracket (Optional)

Actual size

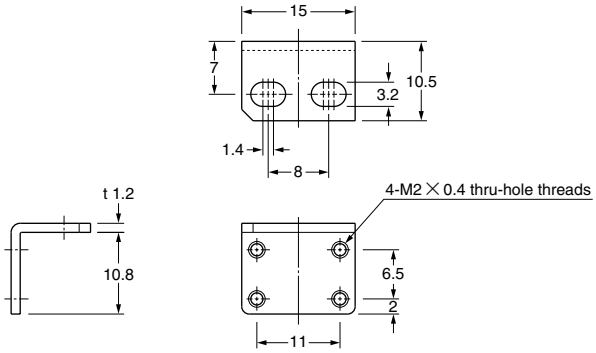

Material: Cold rolled carbon steel (SPCC)
(Uni-chrome plated)
Two M2 (length 4mm) pan head screws, and two M2 (length 8mm) pan head screws are attached.

Assembly dimensions
Mounting drawing with **EX-14□**

Actual size

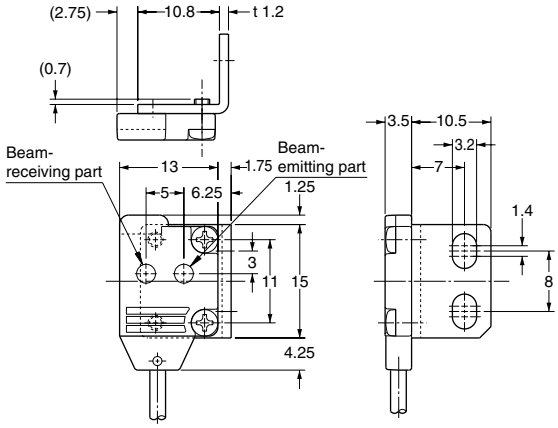

MS-EX10-11 Sensor mounting bracket (Optional)

Actual size

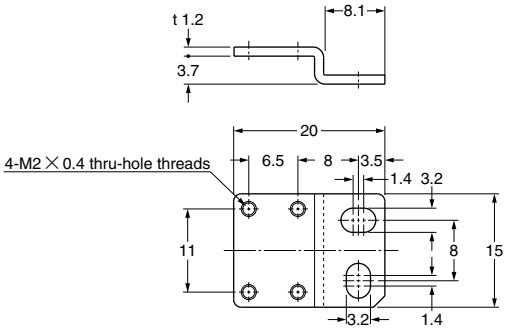

Material: Stainless steel (SUS304)
Two M2 (length 4mm) pan head screws [stainless steel (SUS304)] are attached.

Assembly dimensions
Mounting drawing with **EX-14□**

Actual size

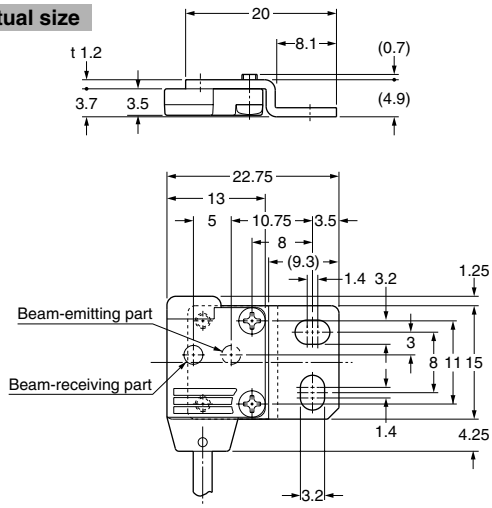

MS-EX10-12 Sensor mounting bracket (Optional)

Actual size

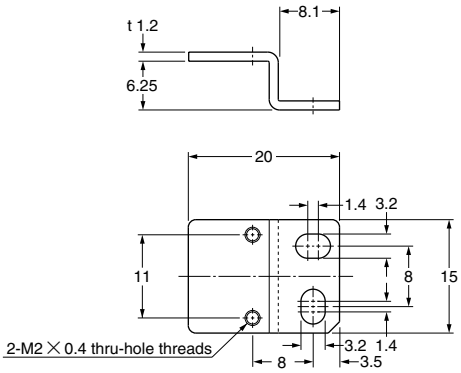

Material: Stainless steel (SUS304)
Two M2 (length 8mm) pan head screws [stainless steel (SUS304)] are attached.

Assembly dimensions
Mounting drawing with **EX-11E□** and **EX-13E□**

Actual size

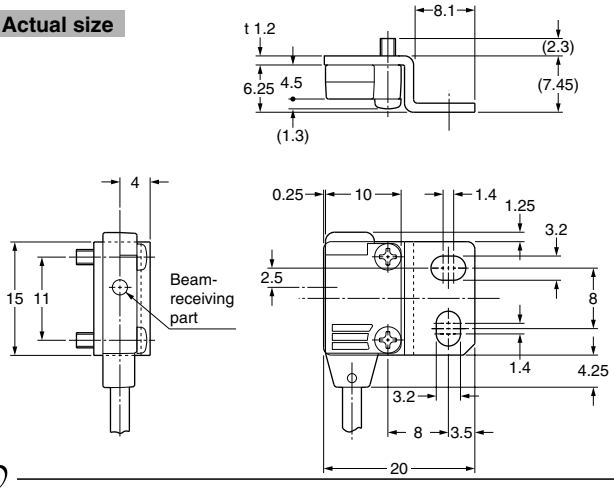

DIMENSIONS (Unit: mm)

MS-EX10-13 Sensor mounting bracket (Optional)

Actual size

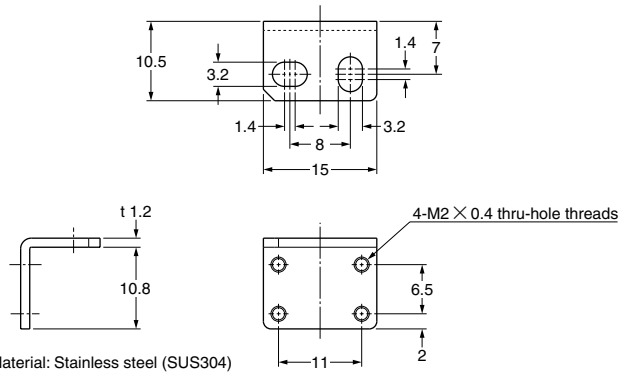

Material: Stainless steel (SUS304)

Two M2 (length 4mm) pan head screws [stainless steel (SUS304)] and two M2 (length 8mm) pan head screws [stainless steel (SUS304)] are attached.

Assembly dimensions

Mounting drawing with **EX-14□**

Actual size