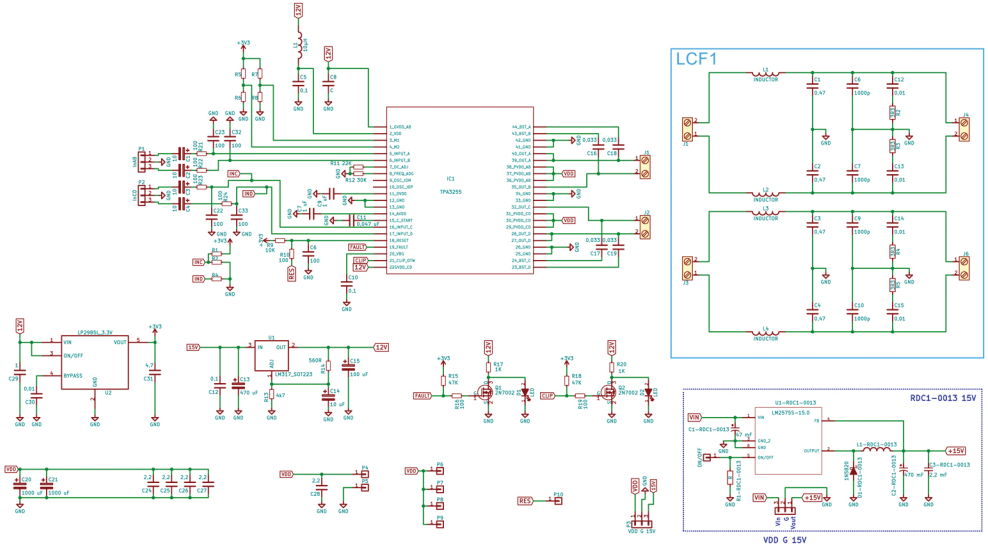
LCF1
IC1
TPA3255
LP2985L_3.3V
LM317_SOT223
LM2575-15.0
RDC1-0013 15V
VDD G 15V
VDD G 15V