KNSCHA® 全球高端电容器制造商

东莞市科尼盛电子有限公司
DONGGUAN KNSCHA ELECTRONICS CO., LTD.

规格承认书

Specification for approval

客户名称: (Customer Name)	深圳市立创电子商务有限公司
产品名称: (Product Name)	贴片铝电解电容器 SMD Aluminum Electrolytic Capacitor
客户料号： (Customer part number)	
科尼盛料号： (KNSCHA number)	RVT1000UF10V34RV0081
型号规格: (Specifications)	SMDE/C1000UF/10V 8*10mm RVT SMDE/C1000UF/10V 8*10mm RVT

制 造 (Manufacture)		
Approval		
拟 制 (Fiction)	审 核 (Chief)	核 准 (Approval)
刘淑芬	刘军军	徐贵南

客 户 (Customer)		
Approval		
检 验 (Inspect)	审 核 (Chief)	核 准 (Approval)
	0	

东莞市科尼盛电子有限公司

DONG GUAN KNSCHA ELECTRONICS CO.,LTD.

No. 8th floor, A3 building, R&D center (Phase I),

Songshan Lake Intelligent Valley, Liaobu Town, Dongguan City.

TEL:0769-83698067 81035570 FAX: 0769-83861559

Email : sales@knscha.com Website: http://www.knscha.com

PART NUMBERING REFERENCE

Product Code Guide – SMD Type

Series (RVT)Voltage (16V) Capacitance (100uF) Capacitance Tolerance (±20%) Case Diameter (¢6.3*5.4mm)

RVT series	10V	1000uF	±20%	¢8*10
R V T	**1** A	**1 0** 2	**M**	**0 8 1 0**
□□□	□□	□□□	□	□□□□
1	2	3	4	5
Series	Rated Voltage	Capacitance	Capacitance Tolerance	Case size

1.Series

RVS	RVK	RVT	RVE	RVW	RVH	RVN	RVZ	RVL

2.Rated Voltage

Rated voltage in volts (V) is represented by a two-digit code

Voltage (WV)	4	6.3	10	16	25	35	50	63	100	400
Code	0G	0J	1A	1C	1E	1V	1H	1J	2A	4G

3.Capacitance:

Capacitance in μF is represented by a three-digit code. The first two digits are significant and the third digit indicates the number of zeros following the significant figure. “R” represents the decimal point for capacitance under 10μF.

Example:

Capacitance	1	4.7	10	22	47	100	220	330	470	1000	1500
Part numbe	1R0	4R7	100	220	470	101	221	331	471	102	152

4.Tolerance:

J= -5% ~ +5%	K= -10% ~ +10%	M= -20% ~ +20%	V= -10% ~ +20%
A= 0 ~ +20%	Q= -10% ~ +30%		

5.Case size:

The first two digits indicate case diameter and the last two digits indicate case length in mm.

¢D*L	4*5.4	5*5.4	6.3*5.4	6.3*7.7	8*6.5
Code	**0405**	**0505**	**0605**	**0607**	**0806**
¢D*L	8*10.2	10*10.2	8*12	10*12	
Code	**0810**	**1010**	**0812**	**1012**	

Table of specification and characteristics

Part NO	CAP(uF) 120HZ 20℃	WV	DF(%) (MAX) 120HZ 20℃	Lc(μA) (MAX) 20℃	RC(mArms) (MAX) 120HZ 105℃	ESR Ω(max) 100KHZ 20℃	Life (Hrs)
34RV0081	1000	10	0.24	77	310	N/A	2000

Specifications

Items	Performance
Category Temperature Range	-40℃ ~ +105℃
Capacitance Tolerance	-20 % ~ +20 % (120 Hz, 20℃)
Leakage Current*	I≦0.01CV or3(uA)After2minutes(Whichever is greatre)
Dissipation Factor (Tanδ)	≦ 0.18 (120 Hz, 20℃)
Ripple Current (rms)	228mA (120 Hz, 20℃)

Ripple Current & Frequency Multipliers

Frequency	50/60	120	1k	10k to
Multiplier	0.75	1.00	1.20	1.35

Temperature characteristic (Impedance ratio at 120Hz)

UR (V)	6.3	10	16	25	35	50	63	100
Z-25℃ / Z+20℃	4	3	2	2	2	2	3	3
Z-40℃ / Z+20℃	10	8	6	4	3	3	4	4

Endurance Applied with rated voltage after 1000 hrs at 105℃

Capacitance Change	Within ±30 % of initial value
Dissipation factor	Less than 300% of specified value
Leakage Current	Within specified value

Shelf life test after 1000 hrs at 105℃with no rated voltage

Capacitance Change	Within ±30 % of initial value
Dissipation factor	Less than 300% of specified value
Leakage Current	Within specified value

Standards & Remarks	JIS C 5101-1

* For any doubt about measured values, measure the leakage current again after the following voltage treatment. Voltage treatment: Applying DC rated voltage to the capacitors for 2 hours at 105℃.

Marking and Diagram of Dimensions:

Each capacitor shall be marked with the following information.
Marking color:Black.

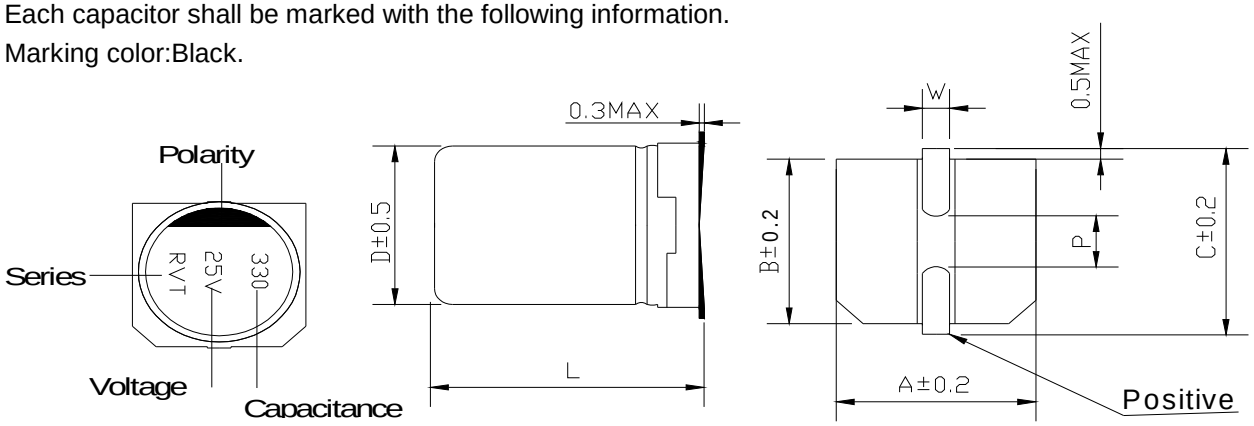

φD	L	A	B	C	W	P
4	5.4±0.3	4.3	4.3	5.0	0.5~0.8	1.0
5	5.4±0.3	5.3	5.3	6.0	0.5~0.8	1.5
6.3	5.4±0.5	6.6	6.6	7.2	0.5~0.8	2.1
6.3	7.7±0.3	6.6	6.6	7.2	0.5~0.8	2.1
8	6.5±0.5	8.3	8.3	9.1	0.7~1.1	3.1
8	10.2±0.5	8.3	8.3	9.1	0.7~1.1	3.1
10	10.2±0.5	10.3	10.3	11.1	0.7~1.1	4.5

Taping Specification for SMD Type

1.Carrier Tape

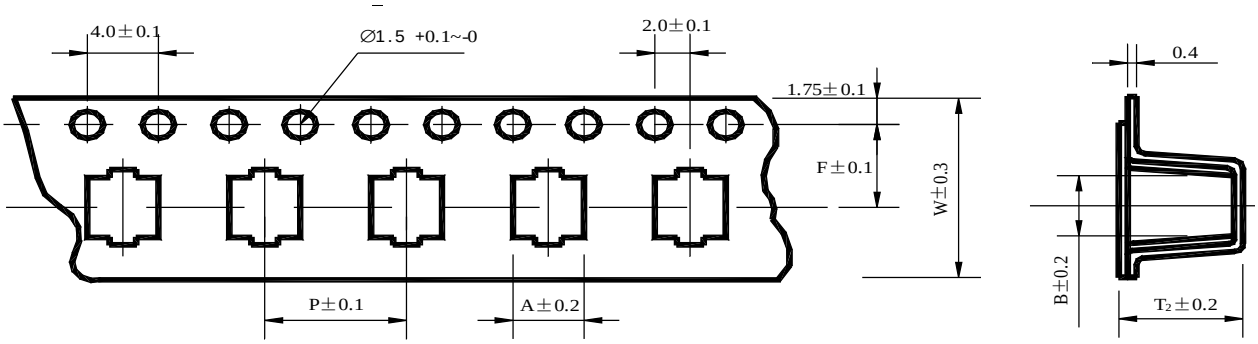

φD*L	4*5.4	5*5.4	6.3*5.4	6.3*7.7	8*6.5	8*10.2	10*10.2
W	12.0	12.0	16.0	16.0	16.0	24.0	24.0
P	8.0	12.0	12.0	12.0	16.0	16.0	16.0
F	5.5	5.5	7.5	7.5	7.5	11.5	11.5
A	4.7	6.0	7.0	7.0	8.7	8.7	10.7
B	4.7	6.0	7.0	7.0	8.7	8.7	10.7
T2	5.8	5.8	5.8	8.2	7.0	11.0	11.0

2.Reel package

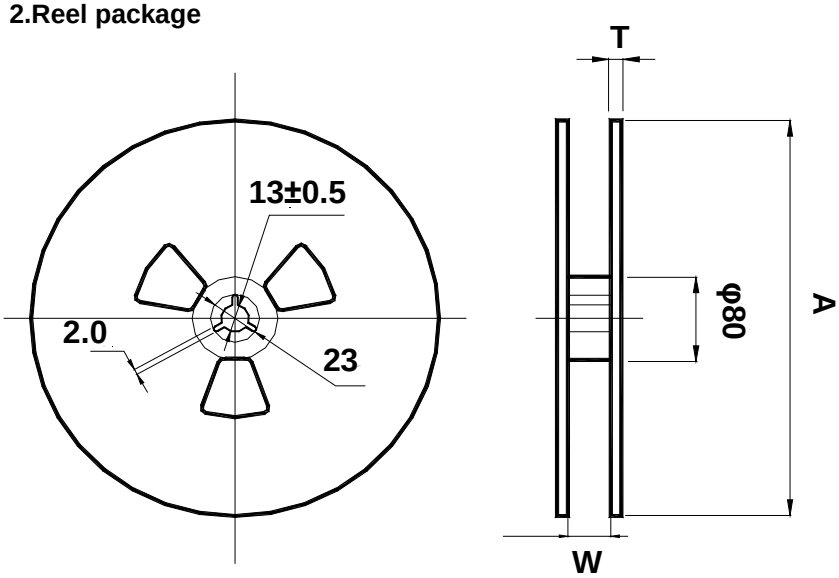

φD*L	4*5.4	5*5.4	6.3*5.4	6.3*7.7	8*6.5	8*10.2	10*10.2
W	13	13	17	17	17	25	25
A	380	380	380	380	380	380	380
T	2.0	2.0	2.0	2.0	2.0	2.0	2.0

3.Package quantity

Uint:pcs

φD*L	4*5.4	5*5.4	6.3*5.4	6.3*7.7	8*6.5	8*10.2	10*10.2
Q'ty/Reel	2000	1000	1000	1000	1000	500	500
Q'ty/Box	20000	10000	10000	10000	10000	5000	5000

4 .Endurance characteristic

NO.	Item	Test Conditions	Specification	
1	Surge Voltage Test	At 15~35℃, 1000 cycles of 30s on and 330s off. Applying voltage	△C/C	±15%Initial measured value
			tgδ	≤Initial specified value
			I	≤Initial specified value
			Physicac	No visible damage

Rated Voltage	6.3	10	16	25	35	50	63	100
Surge Voltage	7.3	11	18.4	29	40	58	73	115

NO.	Item	Test Conditions	Specification	
2	Damp Heat Test	capacitor shall be exposed for 500±8 hours in an atmosphere of 90~95%R H .at 40±2℃, And then the Capacitor shall be subjected to standard atmospherjc conditions for 1-2hours, after which measurements shall be made.	△C/C	±10%Initial measured value
			tgδ	≤Initial specified value
			I	≤Initial specified value
			Physicac	No visible damage
3	Rotational Temperature Test	Capacitor is placed in an oven whose temperature follow specific regulation to change. The specific regulation is " +20℃ (3 min.)~-40 ℃(30 min.)~+20℃ (3min.)~+105℃ (30 min.) ~+20℃ (3 min.)and it is called a cycle.And then the capacitor shall be subjected to standard atmospheric conditions for 4 hours, after which measurements shall be made.	△C/C	±25%Initial measured value
			tgδ	≤Initial specified value
			I	≤Initial specified value
			Physicac	No visible damage
4	Load Life Test	1.Capacitors shall be placed in oven with application ofrated voltage for 2000 +48/-0 hrs at105 ℃. 2.Then the capacitor shall be subjected to standardatmospheric conditions for 4 hours, after which measurements shall be made.	△C/C	±30% of Initial measured value
			tgδ	⩽300% of Initial specified value
			I	≤Initial specified value
			Physicac	No visible damage
5	Shelf Life Test	1.The capacitors are then stored with no voltage applied at a temperature of 105±2℃ for 1000+48/0 hours. 2.Then the capacitor shall be subjected to standardatmospheric conditions for 4 hours, after which measurements shall be made.	△C/C	±30% of Initial measured value
			tgδ	⩽300% of Initial specified value
			I	≤Initial specified value
			Physicac	No visible damage
6	Vibration test	The following conditions shall be applied for 2 hours in each (X,Y,Z) 3 mutually perpendicular directions,with a total of 6 hours . Vibration frequency range: 10Hz ~ 55Hz Peak to peak amplitude: 1.5mm	△C/C	±15%Initial measured value
			tgδ	≤Initial specified value
			I	≤Initial specified value
			Physicac	No visible damage
7	Solder Heat Resistance Test	After reflow soldering according to Reflow Soldering Condition and restored at room temperature, they meet the characteristics listed.	△C/C	±10%Initial measured value
			tgδ	≤Initial specified value
			I	≤Initial specified value
			Physicac	No visible damage

NO.	Item	Test Conditions	Specification
8	Solderability Test	After the lead wire fully immersed in the solder for 2±0.5 secs at a temperature of 245±5 , the solder coating must be more than 95%.	
9	Adhesion test	Reasonable pulling strength: 0.1~0.7N Pulling speed: 200~300mm/min 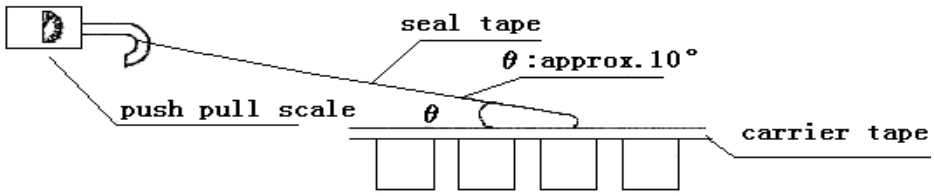	
10	Reflow soldering temperature profile	Reflow soldering 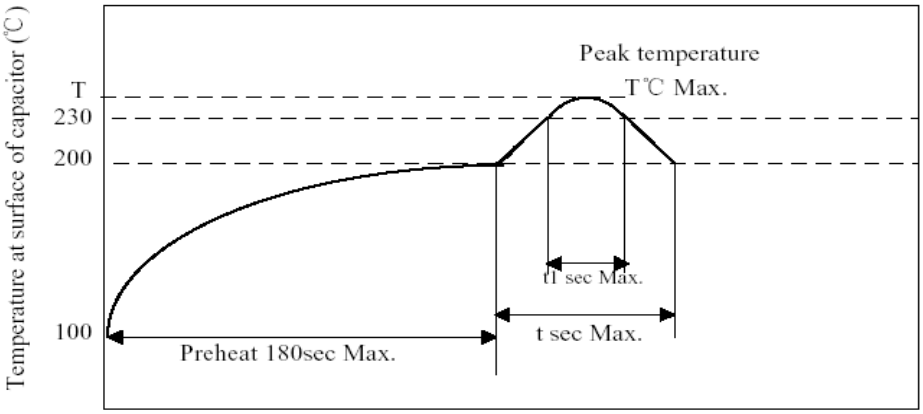 1) Temperature at surface of capacitor shall not exceed T(℃). 2) Period that temperature at surface of capacitor becomes more than 200℃ and 230℃ shall not exceed t and t1 seconds, respectively. Preheat shall be made at 100℃~200℃ and for maximum 180 seconds;	
11	Land pattern	Recommended pad pattern and size (Unit: mm) 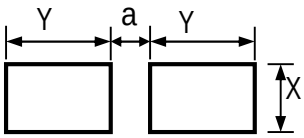	
12	Standards	Satisfies Characteristic W of JIS C 5101-1	

Size	T(℃)	t (second)	t1 (second)
φ4～φ6.3	260	90	40
φ8	250	90	40
φ10	240	60	40

Case size	X	Y	a
Φ4	1.6	2.6	1.0
Φ5	1.6	3.0	1.4
Φ6.3	1.6	3.5	2.1
Φ8	2.5	3.5	3.0
Φ10	2.5	4.0	4.0

Caution for proper use of Aluminum Electrolytic Capactors

Upon suing Aluminum Electrolytic Capactors, please pay attention to points listed below

When the following tyes of electrical loads indicated below are applied to Aluminum Electrolytic Capactors, rapid deterioration of electrical property occurs:

* reverse voltage
* voltage exceeds rated voltage
* rated ripple current is exceeded
* severe chargeing/discharging

At such times,severe heat is generated, gas is emitted, then electrolyte leaks from the sealing area, and pressure relief vent operates due to internal pressure

Device circuits design considerations

1) Confirm installation and operating requirements for capacitors, then use them within the performance limits prescribed in this catalog or product specifications

2)Polarity

Aluminum electrolytic capacitors are polarized.Never apply a reverse voltage or AC voltage. Connecting with wrong polarity will short-circuit or damage the capacitor with the pressure relief vent opening early on. To identify the polarity of a capacitor, see the relevant diagram in the catalogs or product specifications, or the polarity marking on the body of the capacitor.For circuits where the polarity is occasionally reversed, use a bi-polar type of aluminum electrolytic capacitor. However, note that even bi-polar type capacitors circuits.must not be used for AC

3) Operating voltage

Do not apply an over-voltage that exceeds a rated voltage specified for the capacitors. . Although capacitors specify a surge voltage that exceeds the full rated voltage, it does not assure long-term use but limited use under specific conditions

4) Ripple current

Do not apply an overcurrent that exceeds the rated ripple current specified for the capacitors. Excessive ripple current will increase heat production within the capacitors, causing the capacitors to be damaged as follows:

* Shorten lifetime
* Open pressure relief vent
* Short circuit

The rated ripple current is specified along with a specific ripple frequency.

5) Operating temperature (Category temperature)

Do not apply high temperatures that exceed the upper limit of the category temperature range specified for the capacitors.Using the capacitor at temperatures higher than the upper limit will considerably shorten the lifetime of the capacitor and make the pressure relief vent open.In other words, lowering ambient temperatures will extend the expected lifetime of the capacitors

6) Charging and discharging

Do not use capacitors in circuits intended for rapid charge and discharge cycle operations.

If capacitors are used in the circuits that repeat a charge and discharge with a large voltage drop or a rapid charge and discharge at a short interval cycle, capacitance will decrease and/or the capacitors will be generation. damaged by internal heat

7) Operating conditions

Do not use/expose capacitors to the following conditions:

①Direct contact with water, salt water or oil, or high condensation environment.

②Direct sunlight.

③Toxic gases such as hydrogen sulfide, sulfurous acid, nitrous acid, chlorine and its compounds, bromine and its compounds and ammonium.

④Ozone, ultraviolet rays or radiation.

⑤Extreme vibration or mechanical shock that exceeds limits in the catalogs or product specifications.

8) Mounting

①Aluminum electrolytic capacitors contain paper separators and electric-conductive electrolyte that contains and burnorganic solvent as main solvent material, both of which are flammable. If the electrolyte leaks onto a printed circuit board, it can erode the device circuit pattern, may short-circuit the copper traces, smoke and burn.

② For a chip type capacitor, design the land patterns of the PC board in accordance with the recommended footprint dimensions described in the catalogs or product specifications.

Installation

1)Assembling

①Do not try to reuse the capacitors once assembled and electrified, except only capacitors that are taken from a device for periodic inspection to measure their electrical characteristics.

②Capacitors may have been spontaneously recharged with time by a recovery voltage phenomenon. In this case, discharge the capacitors through a resistor of approximately 1kΩbefore use.

③Leakage current of Aluminum Electrolytic Capactors may be increased during long storage time. In this case, the capacitors shall be applied with a DC voltage which is equal to the Rated Voltage of the capacitor through aresistor of 1kΩ in series for 1 hour.

④Confirm the rated capacitance and voltage of capacitors before installation.

⑤Confirm the polarity of capacitors before installation.

⑥Do not try to use the capacitors that were dropped to the floor and so forth.

⑦Do not deform the can case of a capacitor.

⑧Make sure that the terminal spacing of a capacitor equals the holes spacing on the PC board before installing the capacitor. For radial lead type capacitors, some standard pre-formed lead types are also available.

⑨Do not apply excessive mechanical force to capacitors more than the limits prescribed in the catalogs or product specifications. Avoid excessive mechanical force while the capacitors are in the process of vacuum-picking, placing and positioning by automatic mounting machines or cutting the lead wires by autor insertion machines

2）Cleaning assembly boards

①Do not clean capacitors with the following cleaning agents:

* Halogenated solvents: cause capacitor failures due to corrosion.

* Alkali system solvents: corrode (dissolve) the aluminum can case.
* Terpene and petroleum system solvents: deteriorate the rubber seal materials.
* Xylene: deteriorates the rubber seal materials as well.
* Acetone: erases the markings printed on a capacitor.

3)Maintenance inspections

1) For industrial use capacitors, make periodic inspections of the capacitors.

2) Characteristics to be inspected

①Significant damage in appearance: vent opening, electrolyte leakage, etc.

②Electrical characteristics: leakage current, capacitance, tanδ and other characteristics prescribed in the catalogs or product specifications If finding anything abnormal on the characteristics above, check the specifications of the capacitor and take appropriate actions such as replacement

4)Storage

Do not store capacitors at high temperature or high humidity. Store the capacitors indoors at temperatures of 5 to 35℃and humidities of less than 75%RH.In principle, aluminum electrolytic capacitors should be used within three years after production.

5)Capacitor disposal

Please consult with a local organization for the proper disposal of industrial waste. For incinerating capacitors, apply a hightemperature incineration (over 800℃). Incinerating them at temperatures lower than that may produce toxic gases such as chlorine. To prevent capacitors from explosion, punch holes in or sufficiently crush the can cases of the capacitors, then incinerate.

6)Environmental Consideration

①In accordance with the EU RoHS2.0 Directive 2015/863 related to limits of hazardous substances requirements / EU regulations, the giant container products comply with the relevant provisions

②RONGJU each year in accordance with EU directives RoHS latest test, while the products inside and outside packaging are marked RoHS.

EIAJ RCR-2367B- Guideline of notabilia for fixed aluminium electrolytic capacitors for use in electronic equipment[Technical Standardization Committee on Passive Components (Established in March 1995, Revised in March 2002)].