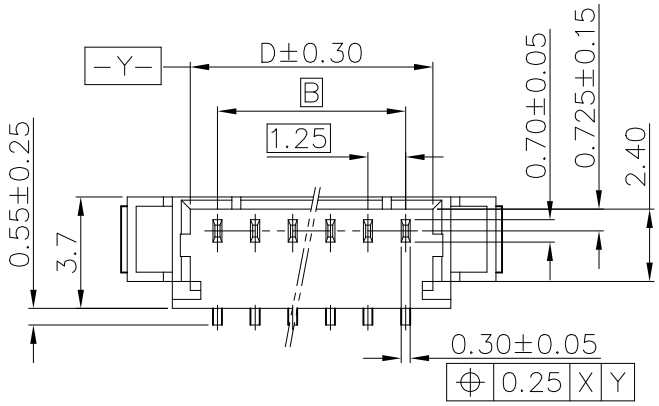

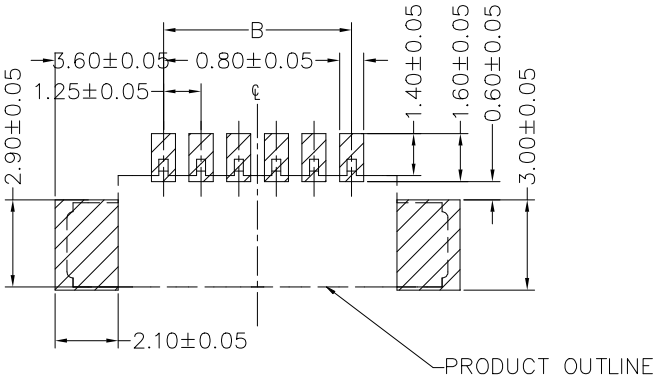

P.C.BOARD LAYOUT
PCB TOLERANCES: ±0.05

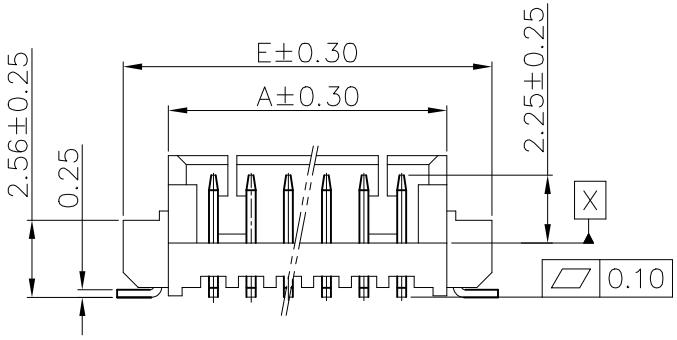

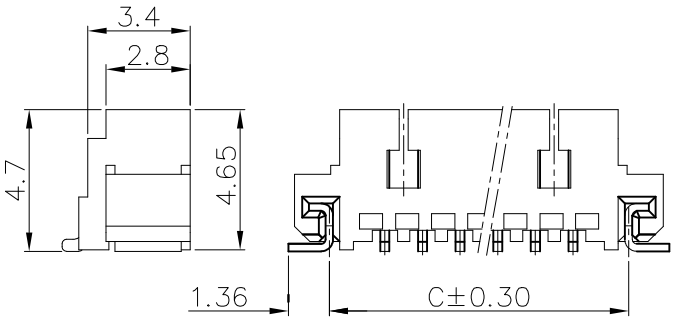

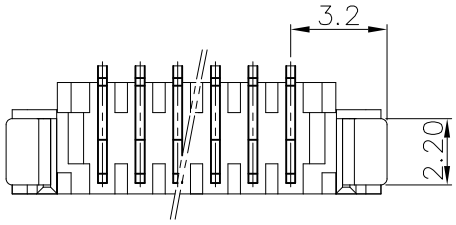

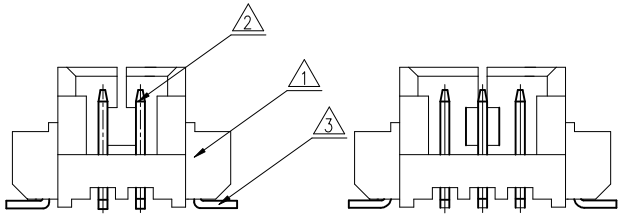

2 POS

3 POS

NOTES

1. SPECIFICATIONS
   - Current Rating: 1A AC,DC
   - Voltage Rating: 125V AC,DC
   - Temperature Range: −40℃ ~ +105℃
   - Contact Resistance: 20mΩ Max.
   - Insulation Resistance: 100MΩ Min.
   - Withstanding Voltage: 500V AC/minute
2. Material & finish:
   - Housing: Thermoplastic, UL94V−0
   - Contact and metal hold−down: Phosphor Bronze
   - Plating of contact: Matte Tin or gold plating over Nickel
   - Plating of metal hold−down: Matte Tin over Nickel
3. Crimping application hand tool P/N: 10118656−1000
4. Ordering Information & Dimensions:

10114828− X X X XX X LF

- Material
  - 1: Natural LCP
  - 2: Black LCP
- Plating
  - 0: 120u" Matte Tin
  - 1: Gold Flash
  - 3: Gold 30u"
- Packaging
  - 1: Tape & Reel
  - 2: Tape & Reel+ Cap(sheet 2)
- pin counts from 02~15
- VOID: NORMAL
  - 1: SEE SHEET 2(VOID 2&4 PIN)
- LF: See note A

Part No.	Dimensions					
	POS	A	B	C	D	E
10114828−xxx02LF	2	4.25	1.25±0.10	4.94	3.05	7.25
10114828−xxx03LF	3	5.50	2.50±0.10	6.19	4.30	8.50
10114828−xxx04LF	4	6.75	3.75±0.10	7.44	5.55	9.75
10114828−xxx05LF	5	8.00	5.00±0.10	8.69	6.80	11.00
10114828−xxx06LF	6	9.25	6.25±0.15	9.94	8.05	12.25
10114828−xxx07LF	7	10.50	7.50±0.15	11.19	9.30	13.50
10114828−xxx08LF	8	11.75	8.75±0.15	12.44	10.55	14.75
10114828−xxx09LF	9	13.00	10.00±0.15	13.69	11.80	16.00
10114828−xxx10LF	10	14.25	11.25±0.20	14.94	13.05	17.25
10114828−xxx11LF	11	15.50	12.50±0.20	16.19	14.30	18.50
10114828−xxx12LF	12	16.75	13.75±0.20	17.44	15.55	19.75
10114828−xxx13LF	13	18.00	15.00±0.20	18.69	16.80	21.00
10114828−xxx14LF	14	19.25	16.25±0.20	19.94	18.05	22.25
10114828−xxx15LF	15	20.50	17.50±0.20	21.19	19.30	23.50

Note A: The LF means RoHS compliance, the housing will withstand exposure to peak temperature 260 degree C for 5 sec in the IR re−flow process.

ITEM	MATERIAL	DESCRIPTION
1	THERMOPLASTIC HIGH TEMPERATURE	HOUSING
2	COPPER ALLOY	TERMINAL
3	COPPER ALLOY	HOLD DOWN

mat'l. code			surface ISO 1302	tolerance ISO 406 ISO 1101	projection
ltr	ecn no	dr	date	tolerances unless otherwise specified	
K	ELX-N-36746	Jason	2020-8-21	angles / linear: .X±.25, .XX±.15, .XXX±.−	mm
				0°±x°	scale 4:1
				dr: Jason HSU 12/1/10	
				engr: Jason Wang 2020-8-21	
				chr: − −	
				appd: TIM YAO 2020-8-21	
sheet index	revision	K			
	sheet	1			

product family: MINITEK

title: WTB 1.25MM WAFER 180° SMT

dwg no: 10114828 sheet 1 of 5 size A3

type: Product Customer Drawing

Amphenol FCi

© 2016 AFCI

Downloaded from Arrow.com.

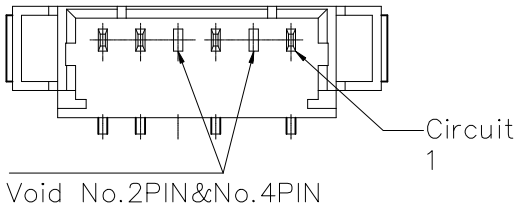

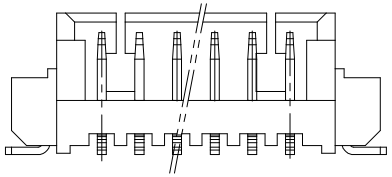

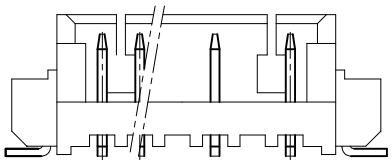

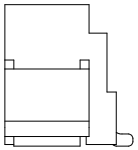

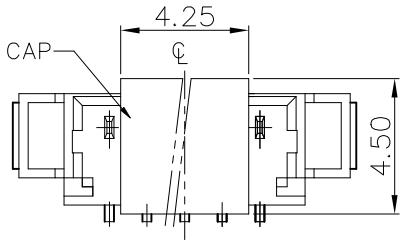

ASSEMBLY CAP

10114828–XXXXX1LF

mat'l. code				surface ISO 1302 √	tolerance ISO 406 ISO	projection 1101	product family MINITEK
ltr	ecn no	dr	date	tolerances unless otherwise		specified	title
K	ELX-N-36746	Jason	2020-8-21	angles	linear .X±.25	mm	WTB 1.25MM WAFER 180° SMT
					.XX±.15		
				0°±x°	.XXX±.–	scale 4:1	
				dr	Jason HSU 12/1/10	Amphenol FCi	dwg no 10114828 sheet 1 of 5 size A3
				engr	Jason Wang 2020-8-21		
				chr	– –		
				appd	TIM YAO 2020-8-21		type Product Customer Drawing
sheet index	revision sheet	K 2					

form: A3-2016-02-24

PDS: Rev :K STATUS:Released Printed: Sep 03, 2020

© 2016 AFCI

Downloaded from Arrow.com.