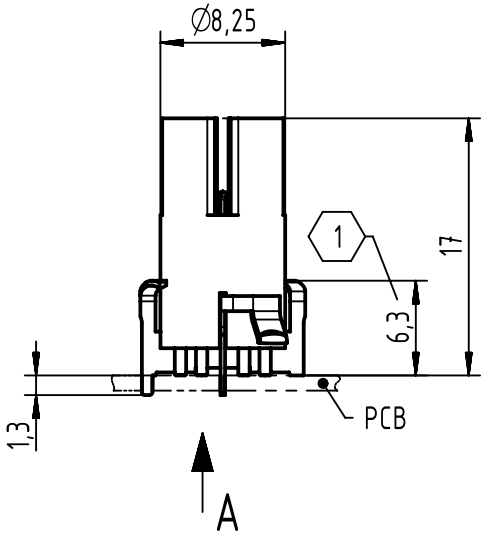

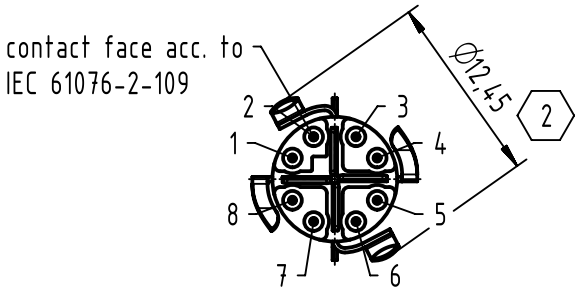

A (5:1)

recommended PCB layout

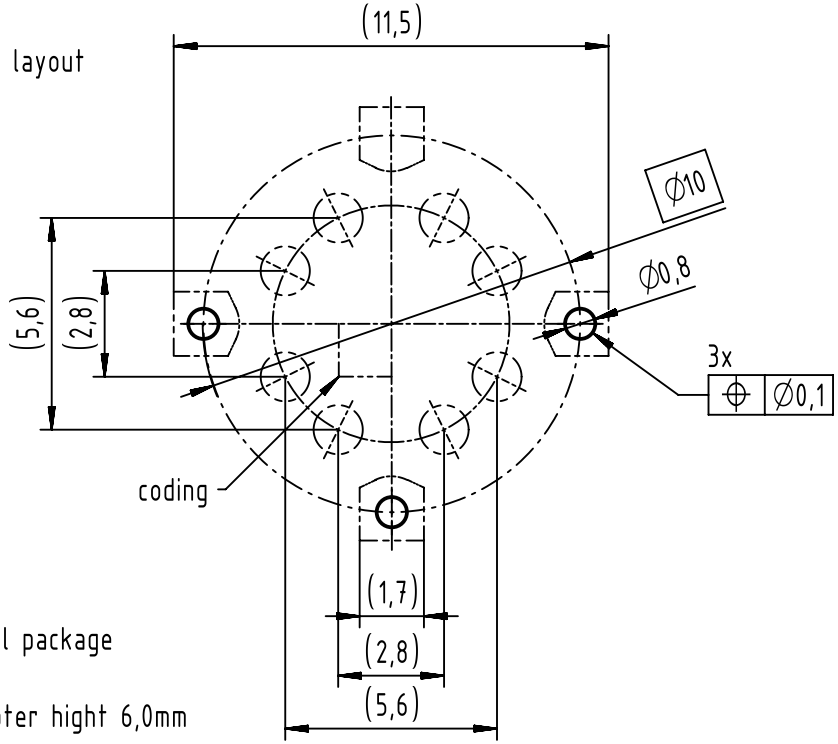

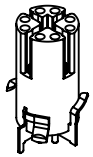

- 75 pcs. Tape on Reel package

1 recommended adapter hight 6,0mm

2 recommended housing diameter Ø11,4mm

All Dimensions in mm Original Size DIN A4	Scale 2:1	Free size tol.		Ref. Sub.	
All rights reserved Department EC PD - DE	Created by HELLMANN	Inspected by EISFELD	Standardisation KOHLER	Date 2016-05-24	State Final Release
HARTING Electronics GmbH D-32339 Espelkamp	Title HARTING M12 PCB recpt str 8-pole X-cod female shielded				Doc-Key / ECM-Nr. 100671216/UGD/001/A 500000104428
	Type TB	Number 21033812821		Rev. A	Page 1/1

A4