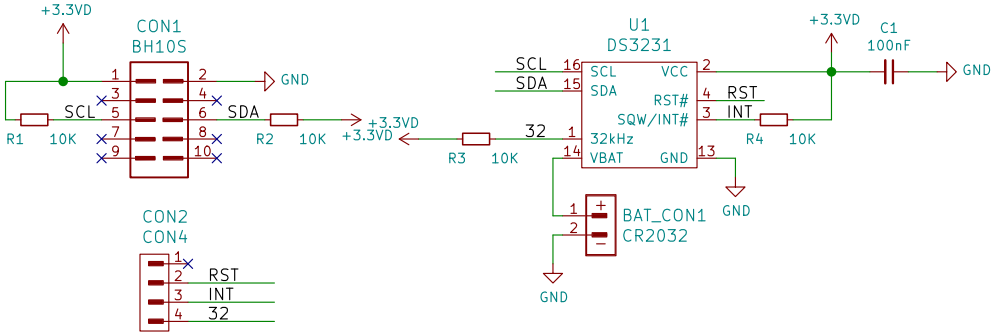

Sheet: /
File: MOD-RTC2_Rev_A.sch

Title:

Size: User	Date:	Rev:
KiCad E.D.A. kicad 5.0.0-rc2-dev-unknown-904eb8265ubuntu16.04.1		Id: 1/1