Product Specification

Number: L-KLS10-CBB61

Name: AC Metallized Polypropylene Film Capacitors

Specification:

Customer:

Date: 2024-03-14

Customer Signature:

KLS electronic

WWW.KLSELE.COM

NINGBO KLS ELECTRONIC CO; LTD

Tel : 0086-574-86828566

Fax : 0086-574-86824882

ADD : NO. 8-1, RONGXIA RD. XIAPU SHANQIAN INDUSTRIAL ZONE BEILUN NINGBO ZHEJIANG.

Compile	Check	Review	Approval
Jenny	Jack.C		

1. 外型图 Dimensions

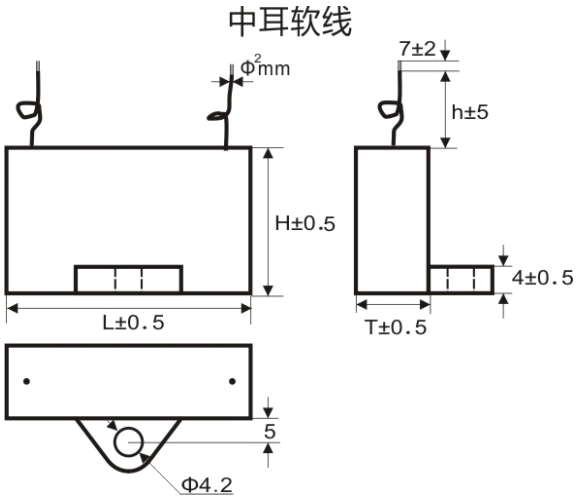

Part NO	Cn (μF)	Un(V.AC)	L(mm)	T(mm)	H(mm)	h(mm)	∅（mm）
KLS10-CBB61-105J450-F-37*25*14	1.0	450	37	14	25	120	20#1015
KLS10-CBB61-155J450-F-37*24*14	1.5	450	37	14	24	120	20#1015
KLS10-CBB61-205J450-F-37*27*17	2.0	450	37	17	27	120	20#1015
KLS10-CBB61-255J450-F-37*27*17	2.5	450	37	17	27	120	20#1015
KLS10-CBB61-305J450-F-37*30*20	3.0	450	37	20	30	120	20#1015
KLS10-CBB61-405J450-F-47*33*18	4.0	450	47	18	33	120	20#1015
KLS10-CBB61-505J450-F-47*37*20	5.0	450	47	20	37	120	20#1015
KLS10-CBB61-605J450-F-47*42*23	6.0	450	47	23	42	120	20#1015
KLS10-CBB61-805J450-F-47*42*25	8.0	450	47	25	42	120	20#1015
KLS10-CBB61-106J450-F-58*42*25	10	450	58	25	42	120	20#1015
KLS10-CBB61-126J450-F-58*42*25	12	450	58	25	42	120	20#1015
KLS10-CBB61-156J450-F-58*49*34	15	450	58	34	49	120	20#1015
KLS10-CBB61-186J450-F-58*50*38	18	450	58	38	50	120	20#1015
KLS10-CBB61-206J450-F-58*50*38	20	450	58	38	50	120	20#1015

2. 主要材料表Main Material Table

No.	构成部件 Parts	材 质 Material
1	金属化薄膜 Metallized film	聚丙烯膜 OPP
2	喷金电极 Metal sprayed electrode	锌锡合金 Sn/Zn Alloy
3	UL1015绝缘线剥线 UL1015 insulate lead wire	20#UL1015软引线
4	外壳 Plastic case	阻燃ABS

3. 性能特性 Specifications

No	项目Item	特性Characteristics
1	产品设计 Product Design	环氧树脂封装 镀锡铜焊片引出 ABS外壳
2	引用标准 Reference Standard	GB 3667-2016
3	最高使用海拔 Max. Altitude	2000 m
4	外观检查 Visual examination，marking（Non-Destructive）	外观：无任何异常 Appearance：no remarkable abnormality
5	外形尺寸 Dimensions（Non-Destructive）	见外形图 See to dimensions
6	容量 Capacitance（Non-Destructive）	见规格表 See to Spec list
7	损耗角正切 Dissipation Factor	0.0010（1000Hz）
8	绝缘电阻 Insulation Resistance	C≤0.33uF ≥5000MΩ C＞0.33uF ≥15000S
9	标准测试环境 STANDARD ATMOSPHERIC CONDITIONS FOR MAKING MEASUREMENTS	
	AMBIENT TEMPERATURE 环境温度	15℃ to 35℃ (If there is any doubt on the results, the measurements shall be made at +20 +/- 5℃)
	RELATIVE HUMIDITY (R.H.)相对湿度	45% to 75% (If there is any doubt on the results, the measurements shall be made at 60% to 70 %.)
	AIR PRESSURE 气压	86 kpa to 106 kpa.
10	工作温度范围 Operating Temperature Range	-25~+85 ℃
11	电容量偏差 Capacitance Tolerance	±5%（J） ±10%（K）
12	极间电压U_{TT} Voltage Between Terminals	1.5Un(Vac) 5s
13	介电质	OPP
14	端子强度 Terminal strength	执行标准：IEC 68-2-21. 在引出导线方向（导线向外）施加1.0kg/10s 拉力，外观无破损/变形 Testing method per IEC 68-2-21. Apply 1.0 kg for 10 +/- 1sec. to the terminal in the axial direction, and acting in a direction away from the body. Shall be no abnormality
	弯曲 Bending	每个循环施加0.5kg，折90°方向2~3s，再反向90°方向2~3s。 合计2个循环，外观无破损/变形/断裂。 Apply 0.5 kg for 2 cycles. Each cycle includes: 90° once, return to its initial position for 2-3 sec., and then to the opposite direction once. Shall be no abnormality

16	耐焊锡热试验 Resistance to solder heat	• 、Flow soldering: 回流焊接条件 Preheat temp 100～120℃ 预热温度100～120℃ Preheat Duration :100sec.max. 预热时间： 最多100sec Soldering Temperature : +260 +/- 5℃. 焊接温度：+260 +/- 5℃ Immersion Duration :≤ 10 sec. 沾浸时间：≤ 10 sec Immersion Depth : 1.5 +/- 0.5 mm from roots.沾浸深度：1.5 +/- 0.5 mm 2）Iron soldering 烙铁焊接 Soldering Temperature : +400℃. .烙铁温度：+400℃ Immersion Duration :≤ 3 sec. 烙焊时间：≤ 3 sec After test, allow it stay alone for 1.5 +/- 0.5 hrs. at standard temperature and humidity before measurements. No remarkable change and legible mark 测试后产品静置1.5 +/- 0.5 小时再静态测试，外观无明显变化，印章易于辨识。 Within +/- 5% of the value before test。 容量△C/C ≤ 10% DF<=80*10-4 at 1 KHz. 损耗DF<=80*10-4 at 1 KHz. IR >= 50% of the limit value of No. 9. 绝缘阻值高于初始值的50%
17	标识耐溶剂性 Solvent resistance of the marking	Solvent: Industrial isopropanol. Solvent temperature:23° C±5° C Dipping time: 5min±0.5min Condition: scrub Scrub material: absorbent cotton Reverting time: No 溶剂：工业异丙醇，温度：23° C±5° C，沾浸时间：5min±0.5min，测试条件：用棉花沾异丙醇进行擦洗
18	温度快速变化 Rapid change of temperature	θ_A=-40±5℃，θ_B=+85±5℃ 5次循环，持续时间：t=30min，转换时间：3min 5 cycles, Duration: t=30min,transition time:3min 静电容量测试时无接触不良，断线及短路，端子无机械损伤 Capacitance: During the test, measured value to be stabilized Appearance: No remarkable abnormality 静电容量变化：ΔC/C≤±3% Capacitance change: ΔC/C≤±3%
19	可焊性 Solderability	Testing method per IEC 68-2-20 Ta. 执行标准：IEC 68-2-20 Ta Soldering temperature : +245 +/- 5℃. 焊接温度：245° C ±5°C， Immersion duration : 2 +/- 0.5 sec. 沾浸时间：2.0s±0.5s More than 95% of circumferential surface of lead wire shall be covered with new solder. 95%导线表面的都应该沾有实验的锡层
20	振动 Vibration	Testing method per IEC 68-2-6 Fc. 执行标准：IEC 68-2-6 Fc. Frequency Change : 10--55--10 Hz. 频率变更：: 10--55--10 Hz. Vibration Distance : 1.5 mm. 振幅：1.5 mm. Test Direction : X, Y, Z. 测试方向：X, Y, Z. Test Duration : 2 +1/- 0 hrs each direction. 测试时间：每个方向2小时 Shall be no open nor short-circuiting. The connection shall be stable. No mechanical damage 无短路/机械损伤
21	碰撞 Bump	1 000 次，加速度390m/s 脉冲持续时间：6ms 1000times,Acceleration:390m/s2 Pulse duration: 6ms 外观无可见损伤 There shall be no evidence of deterioration. 静电容量变化：ΔC/C≤±5% Capacitance change: ΔC/C≤±5%

22	稳态湿热 Damp heat	Testing method per IEC 68-2-3 Ca. 执行标准：IEC 68-2-3 Ca 和JIS C 0022. Refer to JIS C 0022. Test Temperature : +40 +/- 2℃. 测试温度：+40 +/- 2℃. Test Humidity : 90% to 95% R.H. 相对湿度：90% to 95% R.H Test Duration : 500 +24/-0 hrs 测试时间：500 +24/-0 hrs After test, allow it stay alone 4 hrs at standard temperature and humidity before making 试验后放置4h再进行静态测试 measurements. Within +/- 10 % of the value before test。 容量△C/C ≤ 10% DF<=80*10-4 at 1 KHz. 损耗DF<=80*10-4 at 1 KHz. IR >= 50% of the limit value of No. 9. 绝缘阻值高于初始值的50%
23	耐久性 Endurance	Test Temperature : +85+/-2 ℃. 测试温度：+85 +/-2 ℃. Apply 125% of rated voltage for 1,000 +24/-0 hrs; 测试时间：1,000 +24/-0 hrs After test, allow it stay alone for 4 hrs at standard temperature and humidity before measurements. Within +/- 10 % of the value before test。 容量△C/C ≤ 10% DF<=80*10-4 at 1 KHz. 损耗DF<=80*10-4 at 1 KHz. IR >= 50% of the limit value of No. 9. 绝缘阻值高于初始值的50%
24	高温测试 Dry heat resistance	Test temperature : +85±2℃ 测试温度：+85±2℃ Test Duration: 16+1/-0 Hrs 测试时间： 16+1/-0 Hrs Within +/- 5 % of the value before test。 容量△C/C ≤ +/- 5% DF<=80*10-4 at 1 KHz. 损耗DF<=80*10-4 at 1 KHz. IR >= 50% of the limit value of No. 9. 绝缘阻值高于初始值的50%
25	低温测试 Cold Resistance	Test temperature : -40±2℃ 测试温度：-40±2℃ Test Duration: 2+1/-0 Hrs 测试时间： 2+1/-0 Hrs Within +/- 3 % of the value before test。 容量△C/C ≤ +/- 3% DF<=80*10-4 at 1 KHz. 损耗DF<=80*10-4 at 1 KHz. IR >= 50% of the limit value of No. 9. 绝缘阻值高于初始值的50%