PRODUCT NUMBER
90309–XXXXLF

RoHS COMPATIBLE, SEE NOTE 6
PACKAGING, SEE NOTE 5
TOTAL NB OF POSITIONS, 08 TO 34

PLATING
0 = 0.20µm GOLD/GXT ON CONTACT AREA
2µm MIN MATTE TIN ON TAIL
1 = 0.76µm GOLD/GXT ON CONTACT AREA
2µm MIN MATTE TIN ON TAIL
3 = 0.38µm GOLD/GXT ON CONTACT AREA
2µm MIN MATTE TIN ON TAIL
5 = 0.38µm GXT FULL PLATED
6 = 0.76µm GXT FULL PLATED
7 = 0.76µm GOLD/GXT FULL PLATED
9 = 0.20µm GOLD/GXT FULL PLATED

1.27µm Ni MIN DERPLATING

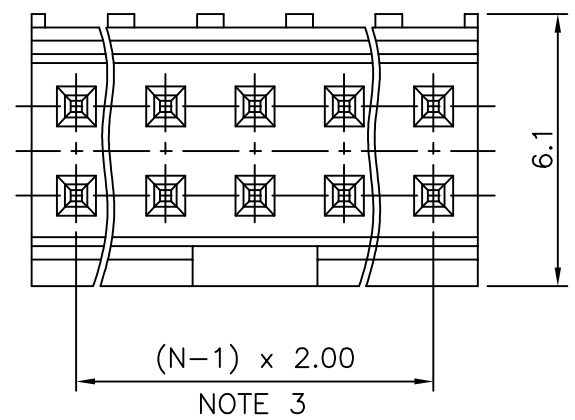

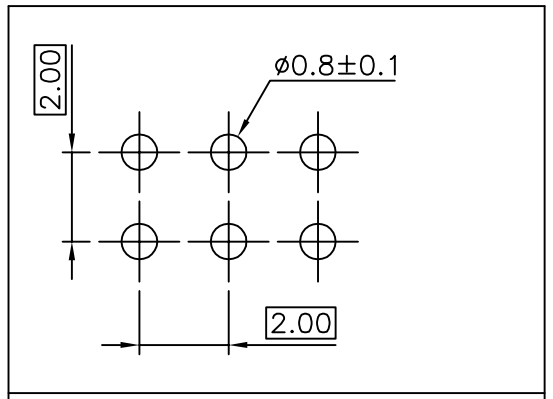

RECOMMENDED HOLE PATTERN

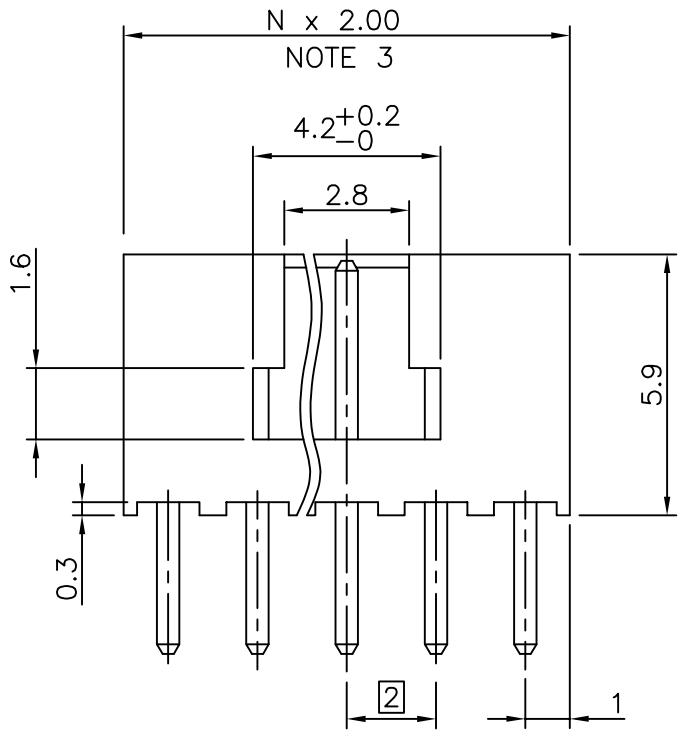

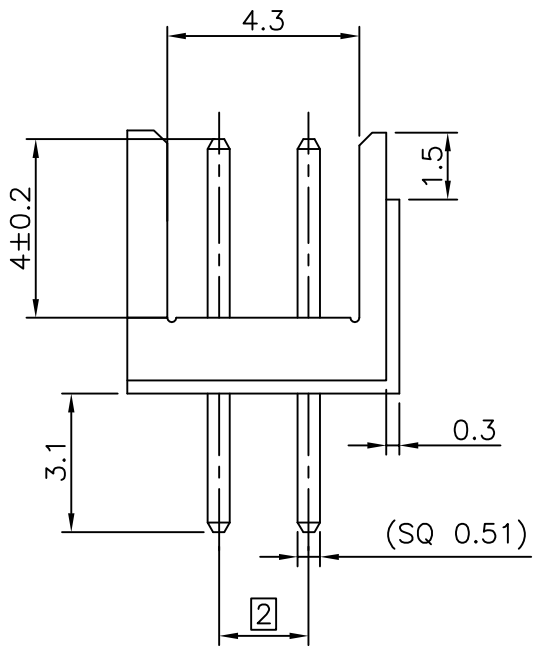

NOTES:

1. MATERIAL HOUSING: HIGH TEMP. THERMOPLASTIC
UL 94V–0, COLOR CREAM
2. MATERIAL TERMINAL: COPPER ALLOY
3. TO DETERMINE DIMENSIONS:
N = NUMBER OF POSITIONS PER ROW
4. 7N MIN. PIN RETENTION IN EITHER DIRECTION.
5. PACKAGING: = POLYBAGS
T = TUBE
6. RoHS COMPATIBLE PRODUCT SPECIFICATIONS

a – PLATING:
– "LF" MEANS THE PRODUCT IS LEAD–FREE, 2µm MINIMUM MATTE TIN OVER 1.27µm MINIMUM NICKEL UNDERPLATE.

b – MANUFACTURING PROCESS COMPATIBILITY
– THE HOUSING WILL WITHSTAND EXPOSURE TO 260°C ±5°C SOLDER BATH TEMPERATURE FOR 5 SECONDS IN A WAVE SOLDER APPLICATION WITH A 1.6mm MIN THICK CIRCUIT BOARD.

c – LABELLING:
– MEETS PACKAGING SPECS AS PER GS–14–920

d – THIS PRODUCT MEETS EUROPEAN DIRECTIVES AND OTHER COUNTRY REGULATIONS AS DISCRIBED IN GS–47–0004.

ltr	ecn no	dr	date
S	F05–0128	LMU	05.02.21
T	F06–0210	LMU	06.07.04
U	F07–0191	JCO	07.09.05
V	F08–0145	ELA	15.04.08
W	B–19190	LMU	14.10.24

mat'l. code: SEE NOTES
surface: ISO 1302
tolerance: ISO 406 ISO 1101
projection
tolerances unless otherwise specified
angles ±2°
linear .X ±0.3, .XX ±0.13, .XXX ±0.05
mm
scale 7:1

dr	JL.CORDIER	97.07.26
engr	J.COMPAGNON	97.07.26
chr	JL.CORDIER	97.07.26
appd	JMC	97.07.26

product family: MINITEK HEADER
title: SHR HEADER 2.00mm TMT DR
dwg no: 90309
sheet 1 of 1
size: A3
type: CUSTOMER Drawing

sheet index | revision | sheet

form: A3

FCIconnect.com
Copyright FCI
PDS: Rev :W STATUS:Released Printed: Nov 13, 2014
Downloaded from Arrow.com