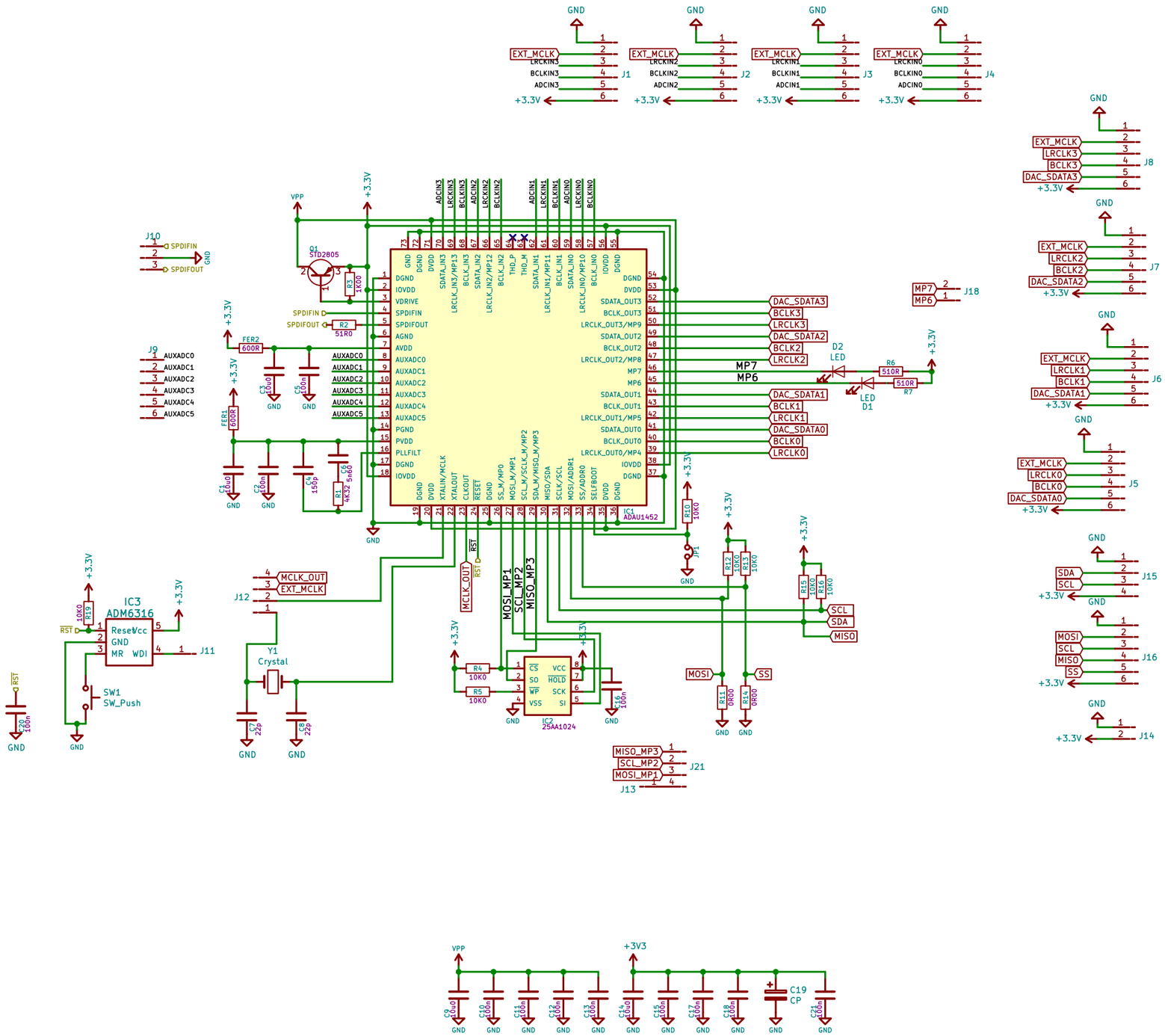

IC1
ADAU1452
IC2
25AA1024
IC3
ADM6316
Q1
STD2805
Y1
Crystal
SW1
SW_Push
J1
J2
J3
J4
J5
J6
J7
J8
J9
J10
J11
J12
J13
J14
J15
J16
J18
J21
D1
D2
LED
MP7
MP6
MOSI_MP1
SCL_MP2
MISO_MP3
MCLK_OUT
EXT_MCLK
SPDIFIN
SPDIFOUT
AUXADC0
AUXADC1
AUXADC2
AUXADC3
AUXADC4
AUXADC5
DAC_SDATA3
BCLK3
LRCLK3
DAC_SDATA2
BCLK2
LRCLK2
DAC_SDATA1
BCLK1
LRCLK1
DAC_SDATA0
BCLK0
LRCLK0
SCL
SDA
MISO
MOSI
SS
+3.3V
GND
VPP
+3V3
C19
CP