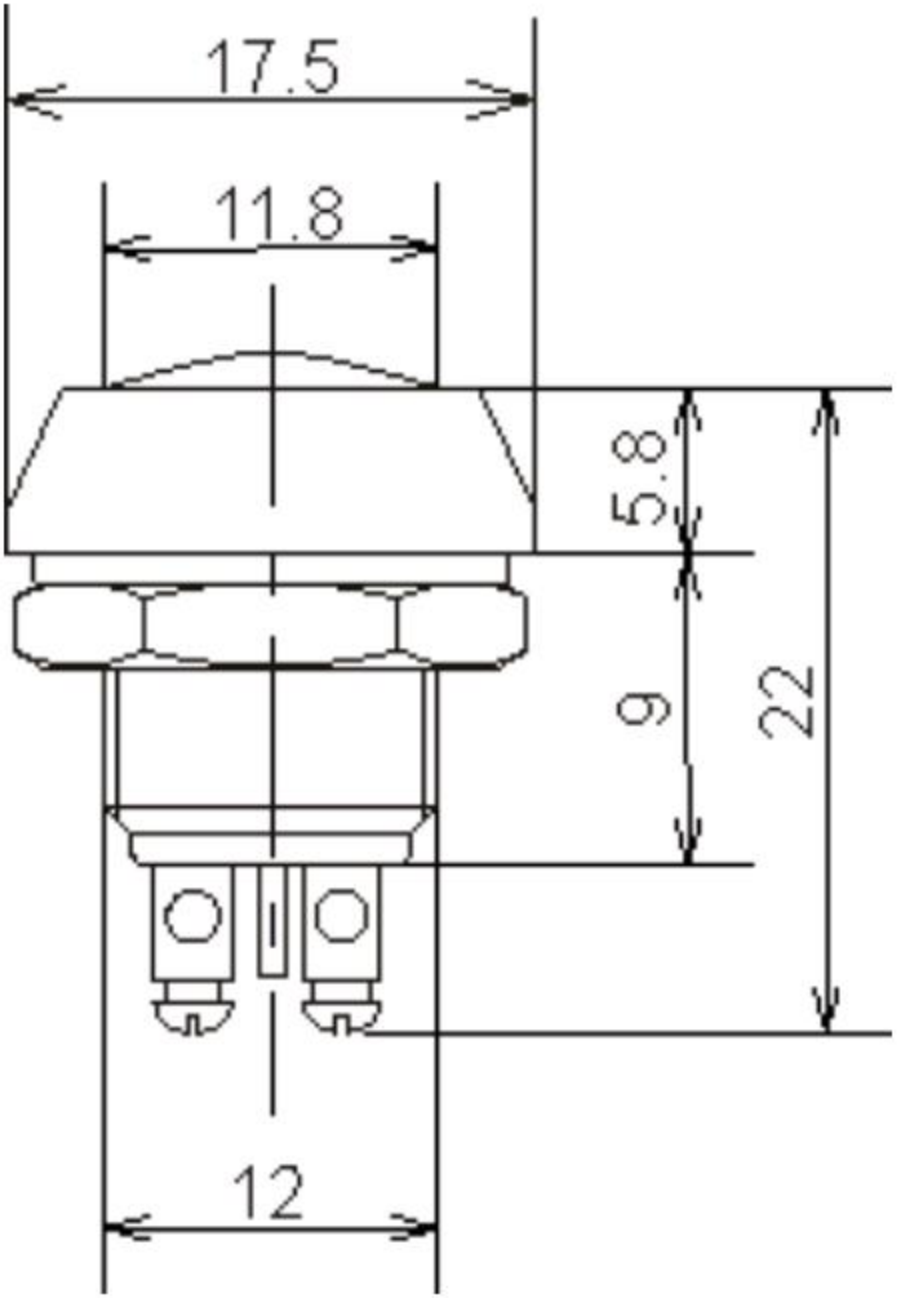
17.5
11.8
5.8
9
22
12