PRODUCT NUMBER
71609–YXXZLF

- RoHS COMPATIBLE, SEE NOTE 6
- OPTIONAL LETTER
  A: PRODUCT PACKED IN TAPE & REEL, SEE TA856.
- NUMBER OF POSITIONS PER ROW: 02 TO 40.
- PLATING CODE
  3= 0.76µm GOLD ON CONTACT AREA.
  2µm MIN MATTE TIN ON TAIL.
  4= 2µm MIN MATTE TIN FULL PLATED
  8= 0.38µm GOLD ON CONTACT AREA.
  2µm MIN MATTE TIN ON TAIL.
  1.27µm Ni MIN UNDERPLATING

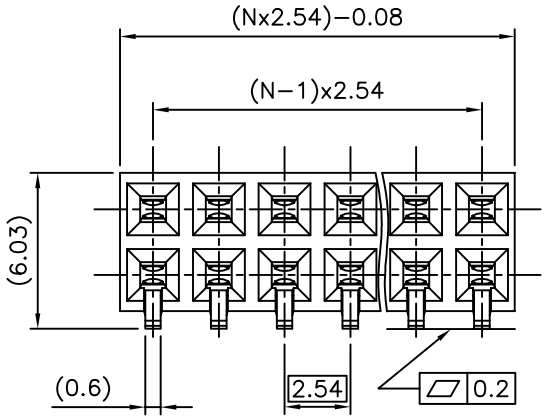

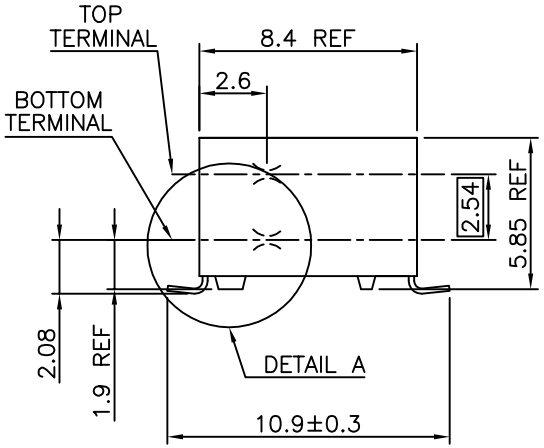

NOTES:

1 – HOUSING MAT'L: THERMOPLASTIC GLASS FILLED FLAME RETARDANT PER UL 94 V–0 COLOR: GREY.
2 – TERMINAL MATERIAL: PHOSPHOR BRONZE.
3 – 2 UP TO 4 POSITIONS PRODUCT PACKED IN PLASTIC BOX.
5 UP TO 40 POSITIONS PRODUCT PACKED IN TUBE.
4 – TO DETERMINE DIMENSIONS:
N = NUMBER OF POSITIONS PER ROW
EXAMPLE: 8 POS: (Nx2.54)–0.08=20.24 mm
5 – RECOMMENDED IR PROFIL PER TA 842.
6 – RoHS COMPATIBLE PRODUCT SPECIFICATIONS

a – PLATING:
– "LF" MEANS THE PRODUCT IS LEAD–FREE, 2µm MINIMUM MATTE TIN OVER 1.27µm MINIMUM NICKEL UNDERPLATE.

b – MANUFACTURING PROCESS COMPATIBILITY
– THE HOUSING WILL WITHSTAND EXPOSURE TO 260°C PEAK TEMPERATURE FOR 30 SECONDS MAX IN A CONVECTION, INFRA–RED OR VAPOR PHASE OR REFLOW OVEN.

c – LABELING:
– MEETS PACKAGING SPECS AS PER GS–14–920

d – LEGAL STATEMENT: SEE GS–47–0004

SCALE 2.5:1

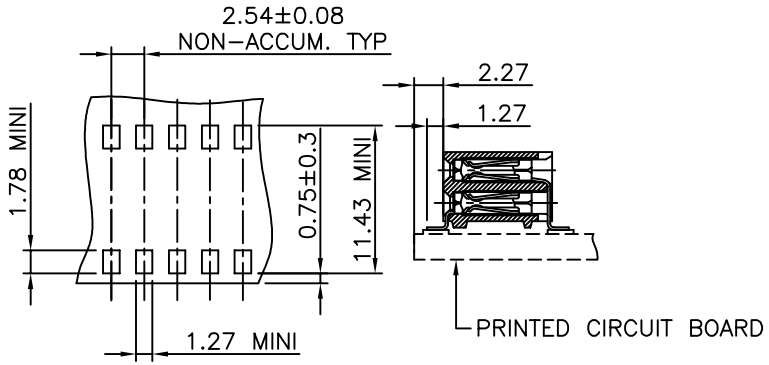

RECOMMENDED HOLE PATTERN

DETAIL A
SCALE 20:1

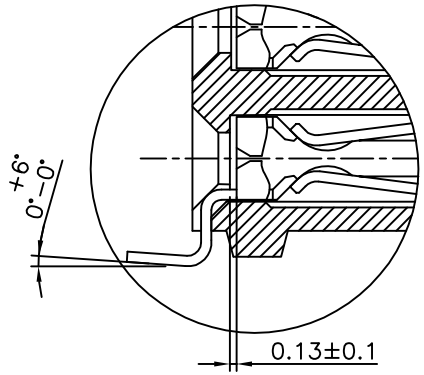

mat'l. code				surface	tolerance	projection	product family
SEE NOTE 1				ISO 1302	ISO 406 ISO 1101		DUBOX
ltr	ecn no	dr	date	tolerances unless otherwise specified			title
W	F04–0347	DLE	04.11.08	angles	linear ±0.3	mm	BtB RECEPT.
X	F06–0204	DLE	06.06.10				HORIZ DR SMT
Y	B–17361	JCO	14.01.04	±2°		scale 10:1	
AA	B–19123	LMU	14.10.21	dr P.NIZZI	94.03.21		dwg no 71609 sheet 1 of 1 size A3
				engr P NIZZI	99.06.08		
				chr JF NOTTEAU	97.05.13		
				appd PNZ	99.06.08		type CUSTOMER Drawing
sheet index	revision sheet						

form: A3

Copyright FCI
FCIconnect.com
PDS: Rev :AA STATUS:Released Printed: Oct 29, 2014
Downloaded from Arrow.com.