ITEM	DESCRIPTION	MATERIAL	Q'TY	SIZE	PART DRAWN NO	WT(Kg)
01	TO-46-25 CAP	SPCC	–	–		

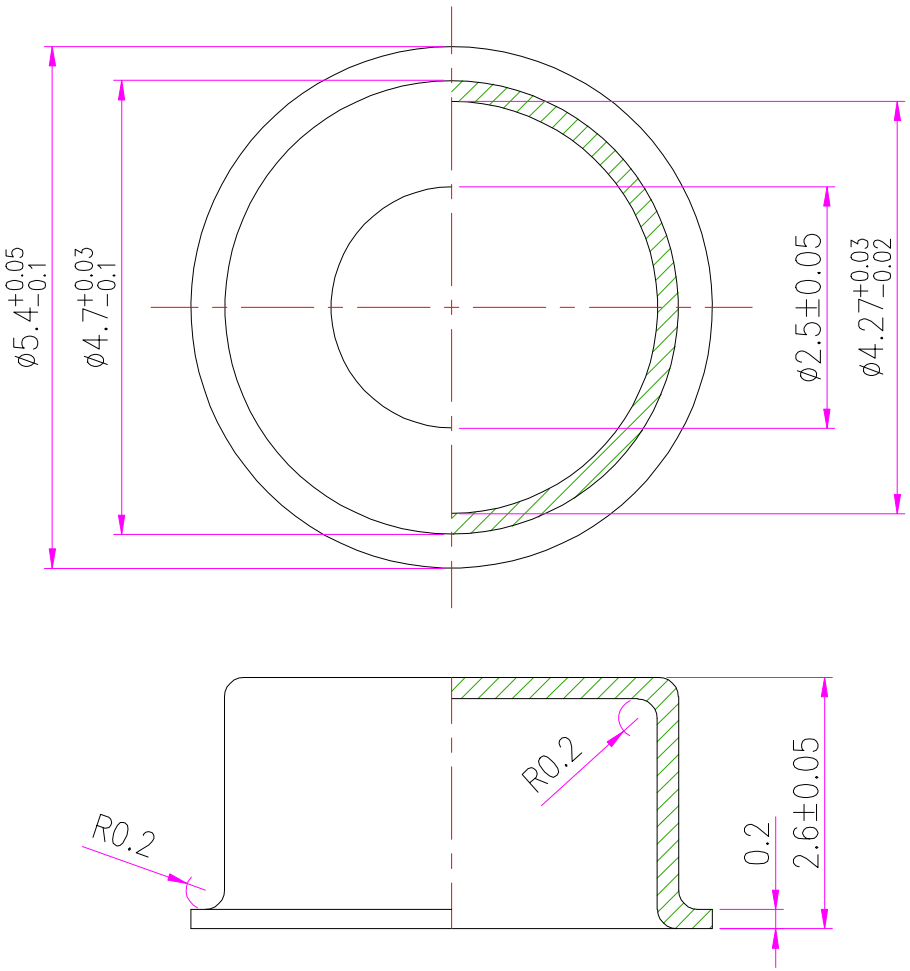

NOTE

*Material : SPCC

*Thickness : 0.2t

*Finish : Ni Plating 5~8μm

Designed by	Checked by	Approved	Reference	Date 2016.08	Scale	Sheet

Garam ELECTRONICS CORP.

Project Title: Cap

Drawing No.: GEC-TO46C-250

Mark	Revision	Date	Drawn	Check	Appr	Note
ⓒ						
ⓑ						
ⓐ						