Order-No.	Shell Size / for No. of Contacts	B ±0.1	C ±0.3	D ±0.3	øF min - max	H ±0.3	U ±0.4	V ±0.15	W +0.2
FKH1-09P-5848	1 / 9	25	31.2	31.8	4.5 - 7	35	30.8	25	16.9
FKH2-15P-5848	2 / 15	33.3	40	32	4.5 - 7	34.7	39.1	33.3	25.2
FKH3-25P-5848	3 / 25	47.04	53.7	35	8 - 10.5	37.7	53	47.04	38.9

øF = Cable diameter

FKHy-xxP-5848

*1) *2)

e.g. FKH3-25P-5848

*1) y for hood size 1, 2 or 3
*2) xx No. of contacts 09, 15 or 25

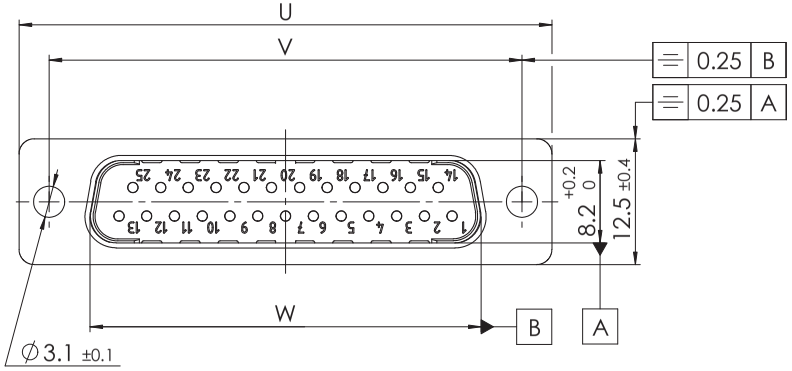

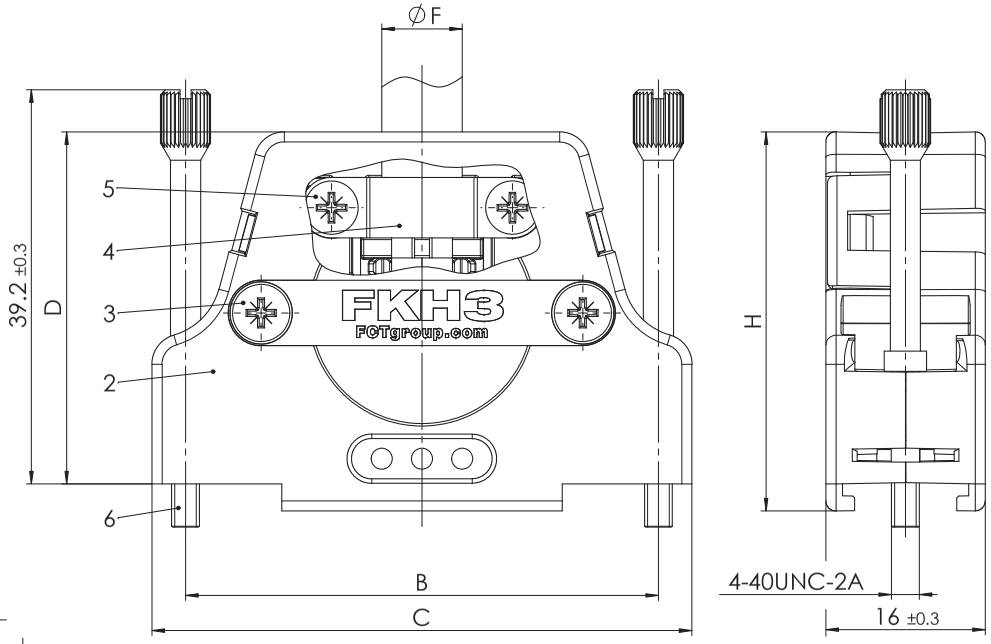

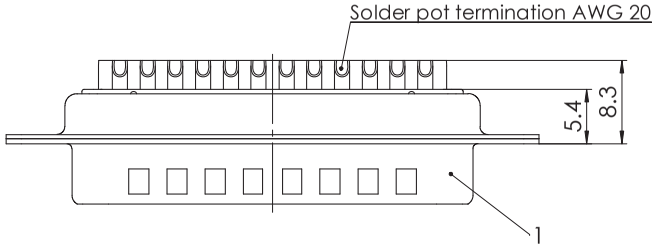

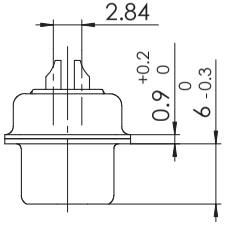

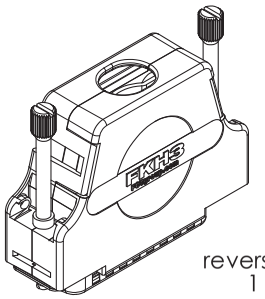

reverse side
1 : 1

RoHS compliant

Packing unit on supplement AM0409

max. torque are 40 Ncm
Part-No. 3 to 6 not mounted

No.	St.	Part	Type Description/Material	Surface plating/Colour/Class
6	2	Knurled thumb screw	FRS1/5 4-40 / Brass	nickel plated
5	2	Cable clamp screw	Steel	zinc plated
4	1	Cable clamp	Steel	tin plated
3	2	Shell screw	Steel	zinc plated
2	1	Hood	FKHy / PC+ABS	black
1	1	D-Sub Connector	FxxP0G1	

REV.	DATE	CH.-NO.
1		

Measurement without tolerance occ. to ISO 2768-m

SCALE 2:1

	NAME / DATE
DRAWN	ameyerrichte 11-02-2016
CHECKED	BWittek 12-02-2016

FCT a molex company

ORIGINAL: DIN A3-DRAWING AS A FILE

TITLE: Hood Connector Set

DWG.NO. FKHy-xxP-5848

REV. 1

REPLACEMENT FOR:

PAGES 1

COMMENT:
ALL RIGHTS ARE RESERVED BY US FOR THIS DRAWING, WITHOUT OUR PRIOR CONSENT, IT MAY NEITHER BE DUBLICATED NOR MADE AVAILABLE TO A THIRD PARTY, AND IT ALSO MAY NOT BE IMPROPERLY USED BY TE RECEIVER, OR A THIRD PARTY.