RoHS STANDARD

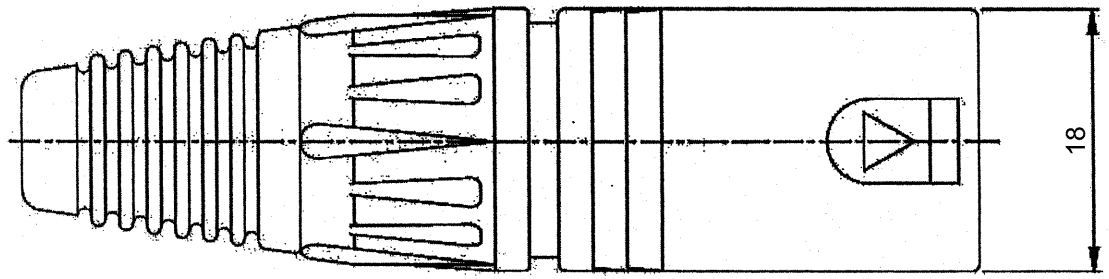

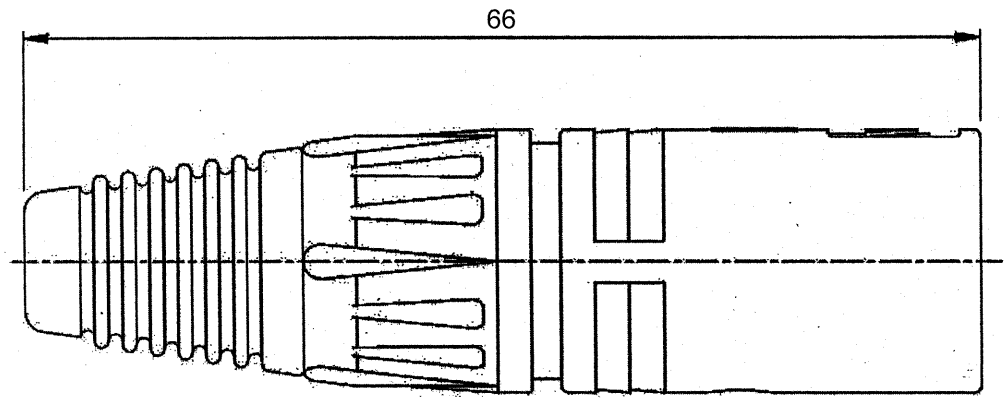

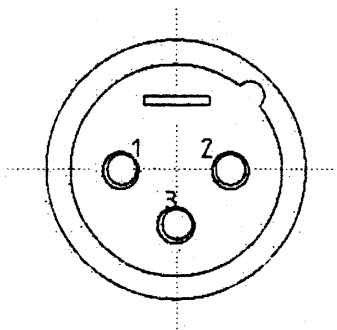

Technical requirement :
1 . This product should meet EU RoHS related requirement.
2 . The surface of plastic part should be without any crackle such as burr,lack,and so on phenomenon.
3 . The surface of metal part should be without any defect such as scaur,nick,oxidation and plating problem.
4 . The electronic performance should be the same as spec.
5 . The un-specified tolerance is : 0~1.5 ± 0.1
1.5~20 ± 0.2

DCI DRAGON CITY INDUSTRIES LIMITED			DESIGN	K.W LAW	REMARK		SCALE	
			DRAWING	W.K YEUNG	REMARK		MATERIAL	
PART NAME	MIKE CONNECTOR	TOLERANCE : ±	CHECK	K.L WONG	REMARK		DWG. NO.	71003-1815
PART NO.	MC-108-3P-EN	UNIT: MM	APPROVAL	K.W CHAN	REMARK		SHEET	